Manual
artemis Cine / Cine HD
camera stabilizer system

Version:1.1/01/04
Ausgabedatum / Issue date:01/04
Bestellnr./ Order no.:sbs18t010a

sachtler GmbH &Co.KG
Gutenbergstrasse 5
D-85716 Unterschleissheim
Germany
Telefon: (+49 89) 32 15 82 00
Telefax: (+49 89) 32 15 82 27
E-Mail: contact@sachtler.de
Homepage:http://www.sachtler.com

Postfach / P.O.BOX 1648
D-85706 Unterschleissheim
Germany

set your ideas in motion!

Manual
artemis Cine / Cine HD
camera stabilizer system

Content

set your ideas in motion!

artemis Cine HD / Cine
camera stabilizer system

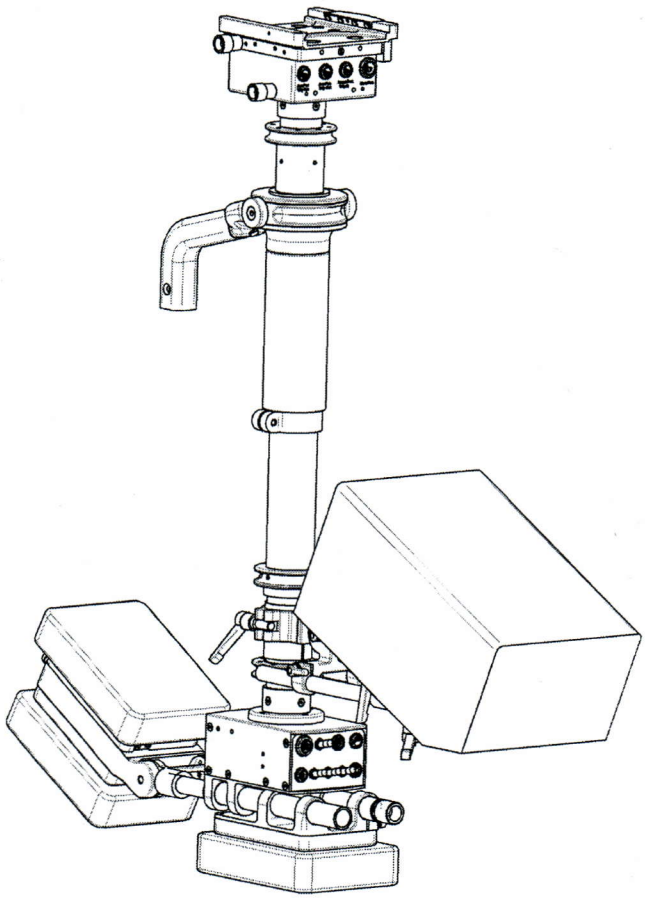

Version:1.1/01/04
Ausgabedatum / Issue date:01/04
Bestellnr./ Order no.:sbs18t040a

sachtler GmbH &Co.KG
Gutenbergstrasse 5
D-85716 Unterschleissheim
Germany
Telefon: (+49 89) 32 15 82 00
Telefax: (+49 89) 32 15 82 27
E-Mail: contact@sachtler.de
Homepage:http://www.sachtler.com

Postfach / P.O.BOX 1648
D-85706 Unterschleissheim
Germany

set your ideas in motion!

Both models of the artemis Cine HD / Cine series are technical identical. The different circuit of the models creates the following versions:

Cine / HD:
12 VDC / 24 VDC camera power supply, analog video - RGB HD video signal processing.
Cine:
12 VDC / 24 VDC camera power supply - analog video signal processing.

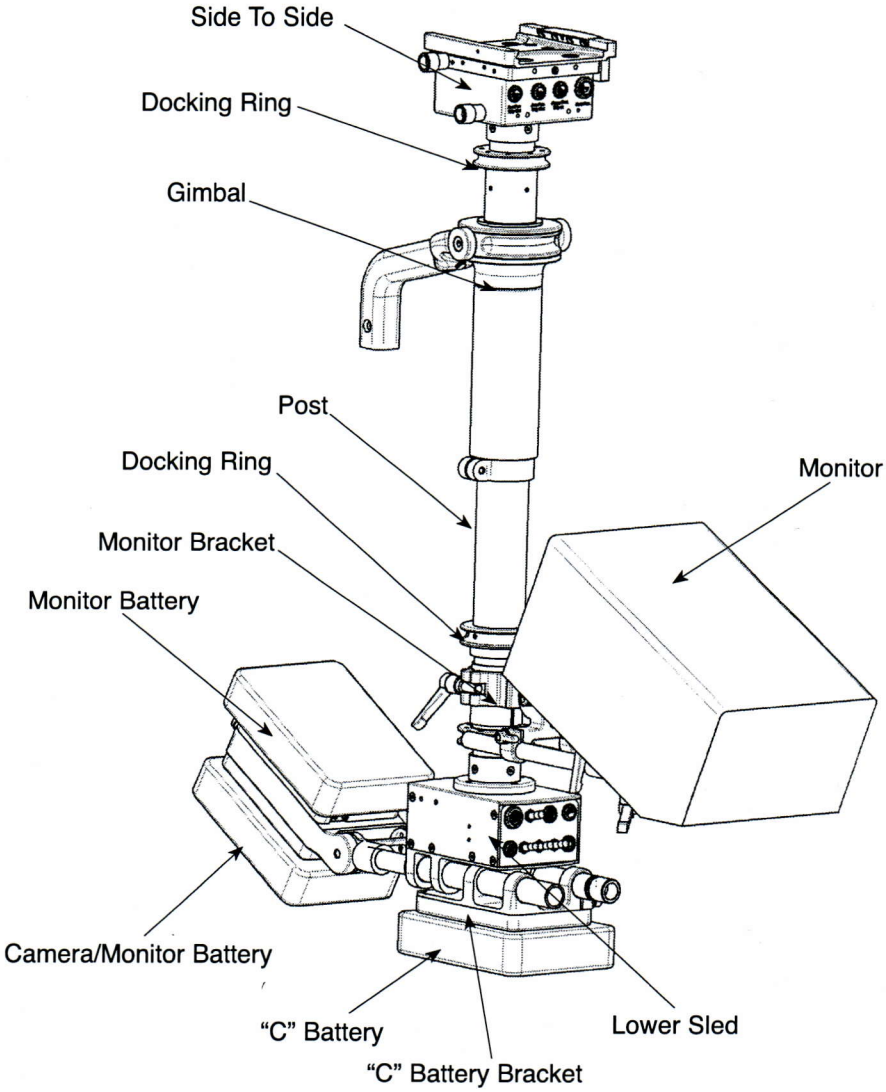

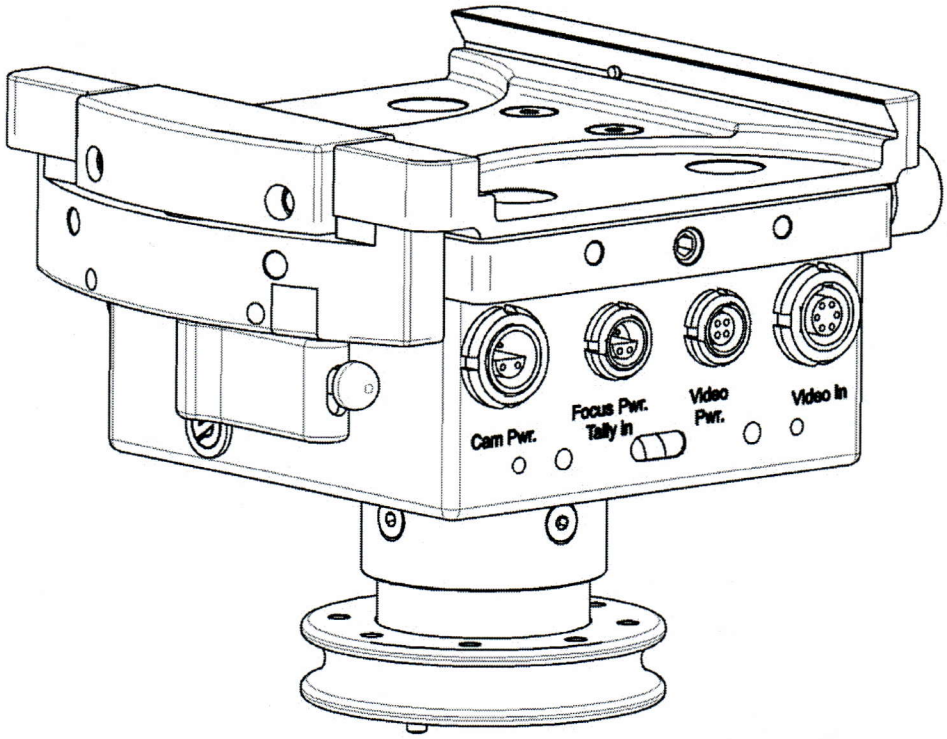

Version:1.1/01/04
Ausgabedatum / Issue date:01/04
Bestellnr./ Order no.:sbs18t070a

sachtler GmbH &Co.KG
Gutenbergstrasse 5
D-85716 Unterschleissheim
Germany
Telefon: (+49 89) 32 15 82 00
Telefax: (+49 89) 32 15 82 27
E-Mail: contact@sachtler.de
Homepage:http://www.sachtler.com

Postfach / P.O.BOX 1648
D-85706 Unterschleissheim
Germany

Overview

The **artemis** side to side module includes following functions:
Mounting of the camera plate, free positioning of the camera mounting platform, inputs and outputs, internal tally electronics and the post interface.

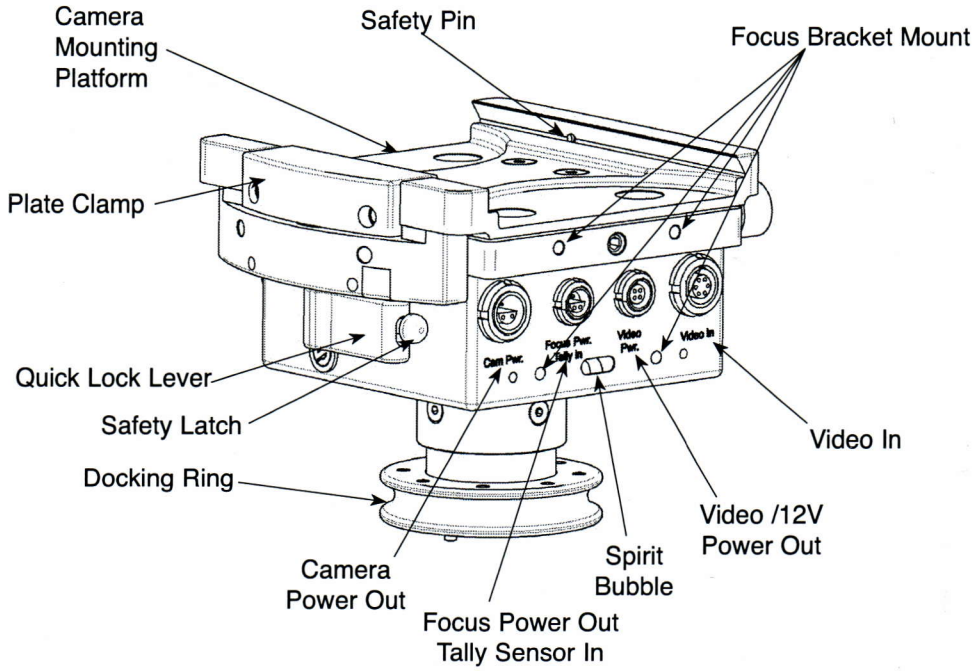

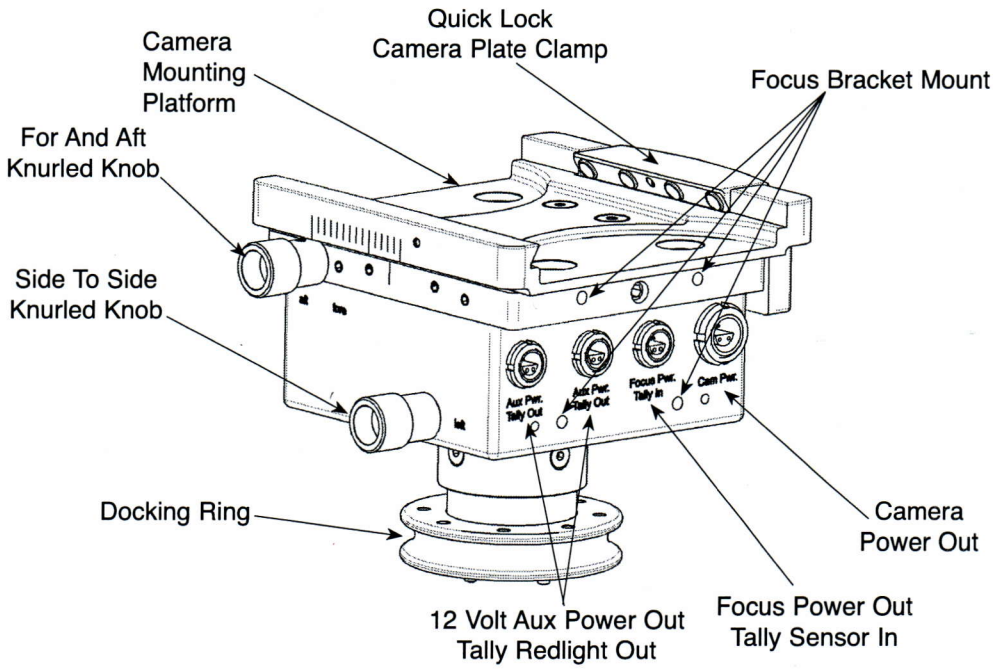

Inputs and Outputs

12V/24V Camera Power Out
These sockets always supply 12 vdc camera power.
After selecting 24 Volt these sockets provide extra 24vcd camera power.
These sockets can power accessories (camera on board light,....) with max. 3 Amps / 25 Watts.
In 12 Volt mode, these sockets are powered by the **Camera-Battery**, in 24 Volt mode by the **Camera-Batt** and the **Mon/Cam-Battery**.

Focus Power Out / Tally Signal In
These sockets provide two functions:

Focus Power Out:
Suppyling various remote focus controls (Genio, Fox,ect.) with 12 VDC.
The **Camera Battery** powers these outputs.

Tally Signal In:
The second function is to serve as inputs for the internal tally system. The tally signal cable is plugged in here.
For this reason there are two sockets at the front of the side to side module.
When one socket is occupied by the remote focus control, the second socket is used for the tally signal cable.

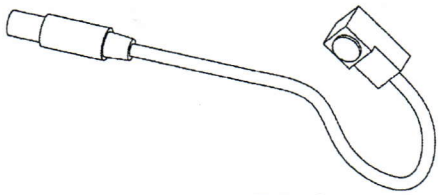
Tally Sensor Cable

Video / Power Out
At this output video transmitters are plugged in. This output provides 12 VDC and the camera video signal. In 12V mode the **Mon/Cam-Battery** powers this output, in 24V mode the **C-Battery**.

Aux Power Out / Tally Out
This socket also provides two functions:

12V AuxPower Out
The first function is to supply various accessories (audio transmitter, timecode generators, ...) with 12 VDC.
These outputs powered by the **Camera Battery** must not be used for devices consuming high currents (max 1.5 Amps).

Tally Out
Second function is to provide the red light (**tally**).
Here you can plug in the **upper tally red light**.

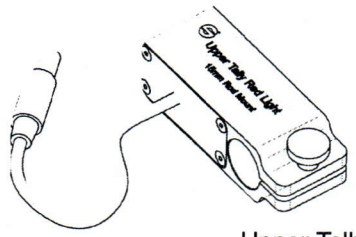
Upper Tally Light

Video In
The different video-in cables are plugged in here. There are two different video-in cables: black cables for analog applications (standard video and film cameras) and the three-cored RGB cable for HD cameras.

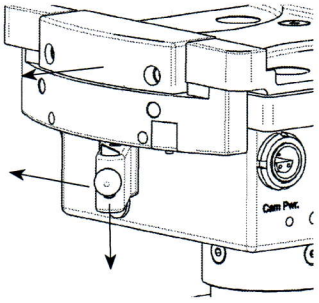

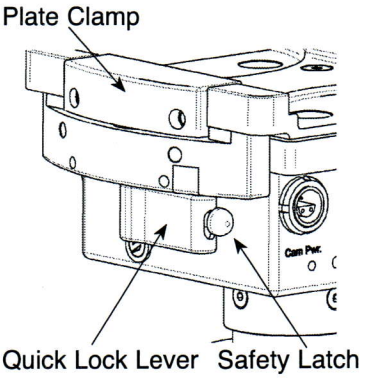

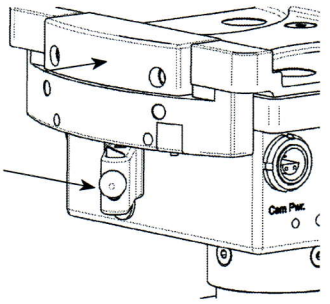

To open the Plate Clamp, pull down the Safety Latch and swing away the Quick Lock Lever till the Plate Clamp releasing the camera plate.

To lock the clamp again push the Quick Lock Lever torward the side to side module.

Note:
Do not block the Safety Latch, it have to be free to engage.

Service Note:

If the clamping effect becomes too weak for the camera plate, you can re-adjust it with a 1.5 mm Allen wrench. There is a small clamp adjust screw inside the plate clamp; the clamp effect increases by rotating this screw carefully to the right.

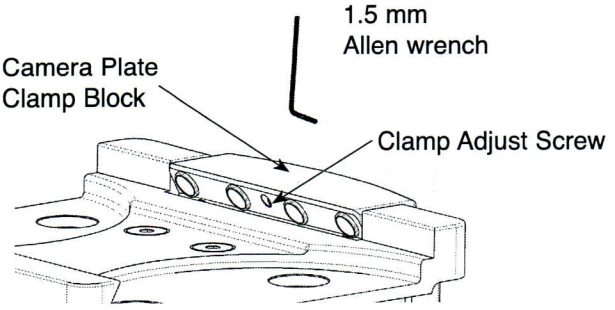

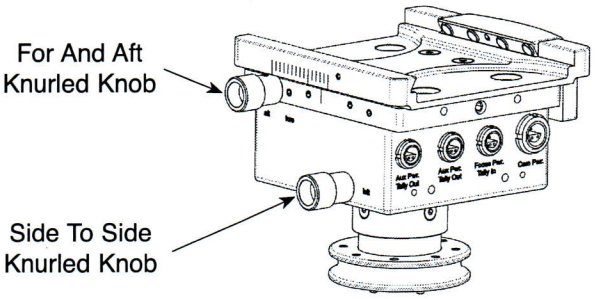

Side to side / fore and aft adjustment

There are two knurled knobs at the rear of the side to side module to balance the system.
Clockwise rotation of the knurled knob marked **Fore/Aft** moves the camera mounting platform forward and counter-clockwise rotation moves it backwards.
Clockwise rotation of the knurled screw marked **Left/Right** moves the camera mounting platform to the right and counter-clockwise rotation moves it to the left.
You can move the camera mounting platform approximately 30 mm (1,8") in both directions.

Note:
Determination of both levels is crucial before mounting the camera.

Separating the Side To Side and lower Sled Modules from the Post

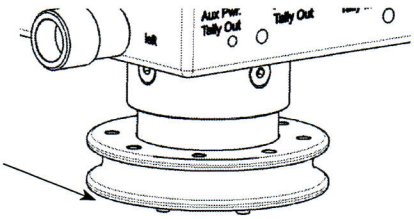

Docking Rings:
The EFP offers three docking rings.
One under the side to side, one at the center post, and one at the lower sled.
All three docking rings serve to place the system in the docking stand.

The docking ring under the side to side as well the one at the lower sled serve as interface between side to side, lower sled module and post at the same time.

To separate the side to side module or the lower sled module from the post, you must use the **post tool**.

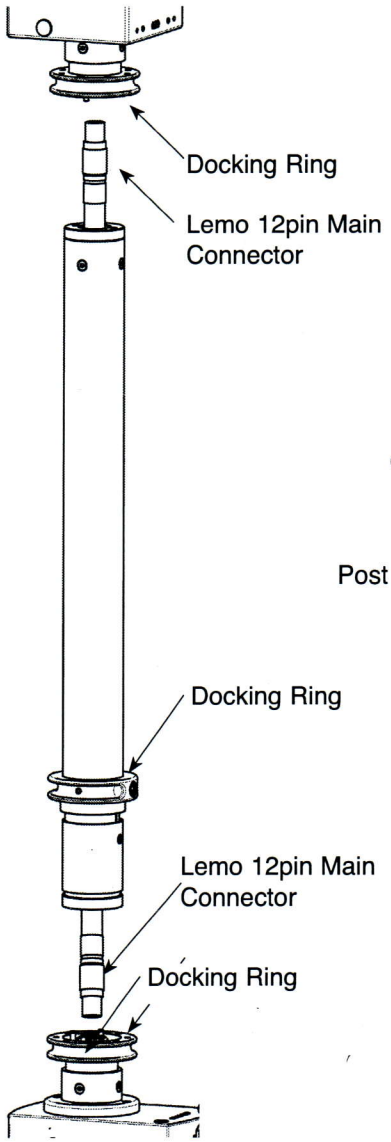

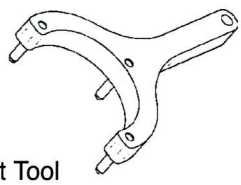

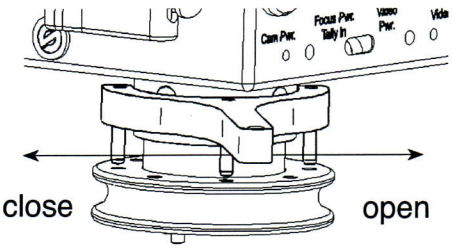

Please be careful when carrying out the seperation, as the connection is very delicate.
Put the post tool into the drilling of the docking ring and open it slowly. You will certainly need several rotations to open this fine thread.
Now withdraw the module just a few centimeters from the post and disconnect off the Lemo plug.

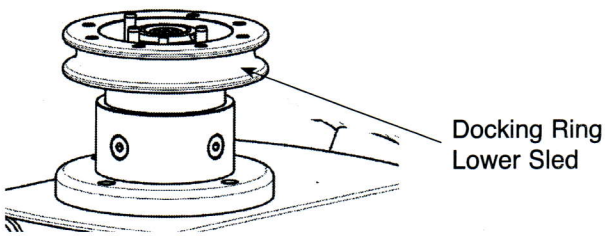

Focus Bracket Mounts
There are four M4 thread pairs at the side to side module to mount the **focus bracket**. They also allow to mount the receiver at the rear of the side to side module, which can facilitate the balancing of cameras with very heavy lenses.

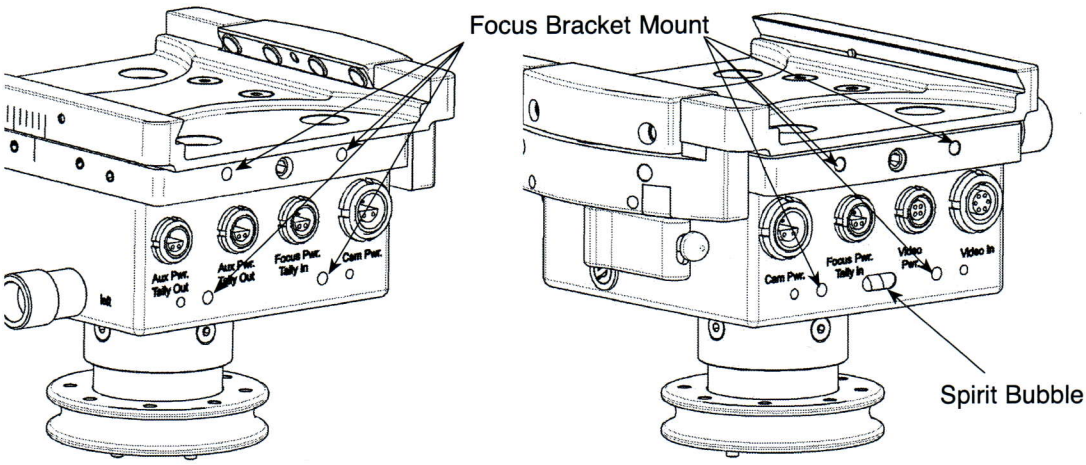

Spirit Bubble
Switching on the **Camera-Battery** illuminates the built-in spirit bubble.

Focus Bracket

The focus bracket serves as mounting support of focus remote receivers, such as Genio, Vox, ARRI.

Note:
Use only original screws and spacer sleeves supplied by Sachtler.
Too long screws damage the receiver electronics and the side to side module mechanics.

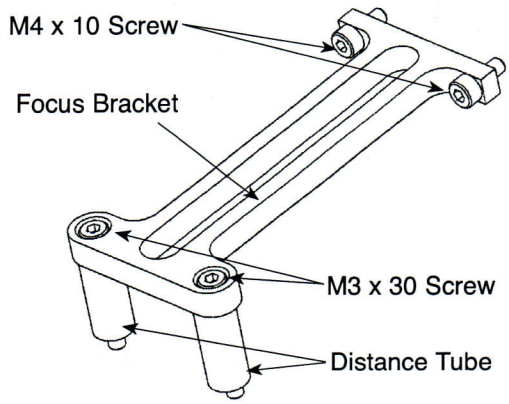

Mounting the Genio/Vox Receiver
Before mounting the receiver on the focus bracket you have to remove the 15 mm rod mount bracket, if existing, from the receiver.
Now you can adjust the receiver and mount it on the focus bracket with the long hollow screws.

Note:
Please use the black plastic spacer sleeves. If you don't want to use these spacer sleeves, you will have to use shorter screws. Wrong screws damage the receiver!

Mounting the ARRI Receiver
Remove the dovetail mount at the ARRI receiver.
Mount the receiver on the focus bracket through the slot using a 3/8" screw.

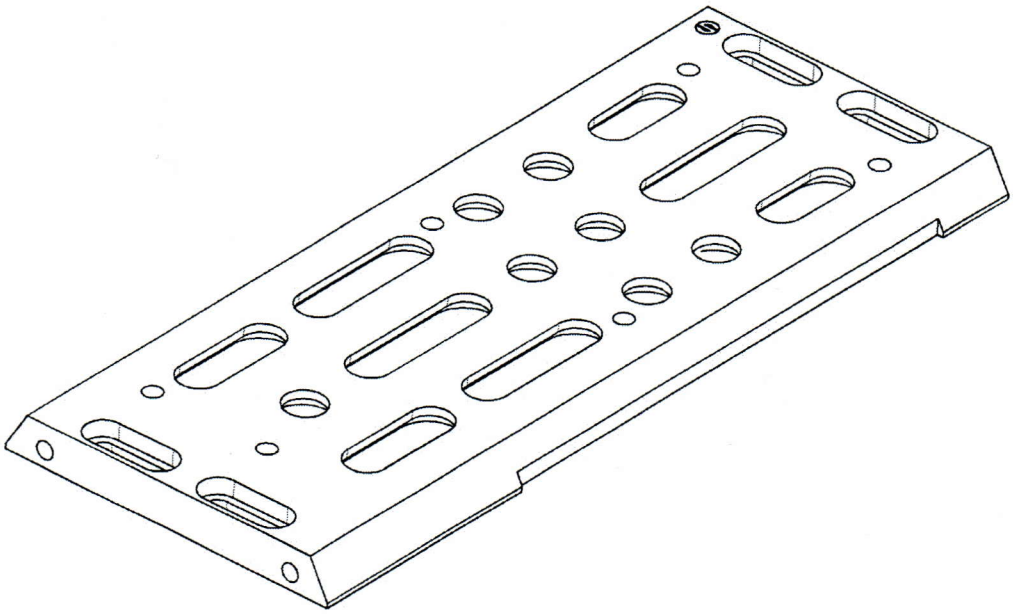

Version:1.1/01/04
Ausgabedatum / Issue date:01/04
Bestellnr./ Order no.:sbs18t100a

sachtler GmbH &Co.KG
Gutenbergstrasse 5
D-85716 Unterschleissheim
Germany
Telefon: (+49 89) 32 15 82 00
Telefax: (+49 89) 32 15 82 27
E-Mail: contact@sachtler.de
Homepage:http://www.sachtler.com

Postfach / P.O.BOX 1648
D-85706 Unterschleissheim
Germany

Overview

The artemis camera plate provides holes and slots designed for 3/8" screws.
Using the off center row with holes and slots you can mount cameras without centered 3/8" threads (e.g. several camera types from Aaton and ARRI).
Additionally, the camera plate provides holes for direct low mode mounting on the video top of different ARRI cameras (435 & LT).

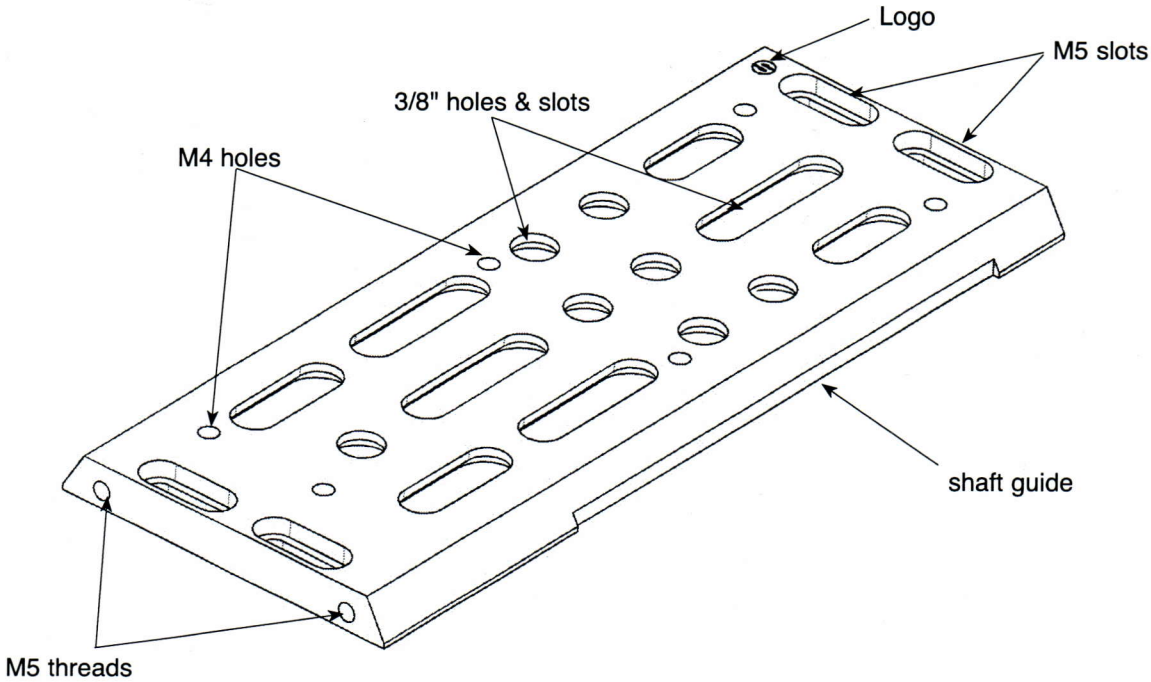

Mounting the Camera Plate
The camera plate can only be used when properly aligned towards the lens beneath the camera. The Sachtler logo in the left corner and the word "lens" serve as point of reference, i. e. this side of the plate must point towards the optics during mounting.

Note:
Use only original 3/8" screws by Sachtler or screws with equal dimensions. Screws that are too long can penetrate the bottom of the camera and cause damage (e.g. ARRI SR camera types).

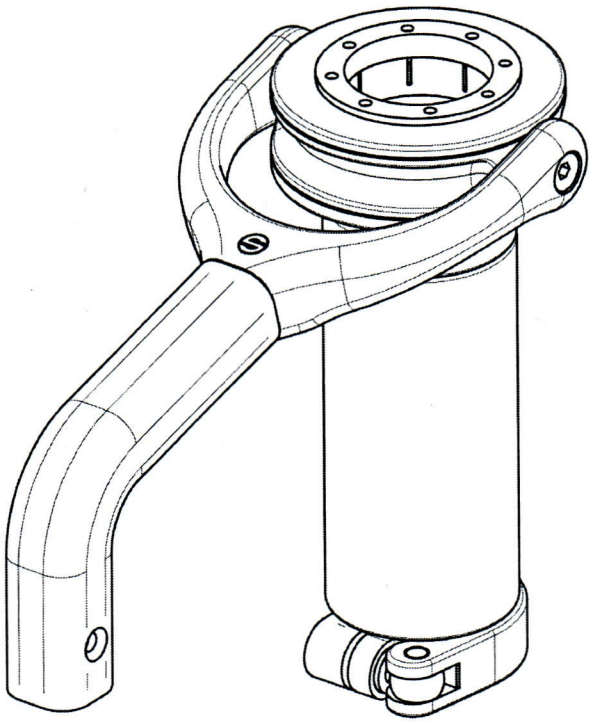

Version:1.1/01/04
Ausgabedatum / Issue date:01/04
Bestellnr./ Order no.:sbs18t110a

sachtler GmbH &Co.KG
Gutenbergstrasse 5
D-85716 Unterschleissheim
Germany
Telefon: (+49 89) 32 15 82 00
Telefax: (+49 89) 32 15 82 27
E-Mail: contact@sachtler.de
Homepage:http://www.sachtler.com

Postfach / P.O.BOX 1648
D-85706 Unterschleissheim
Germany

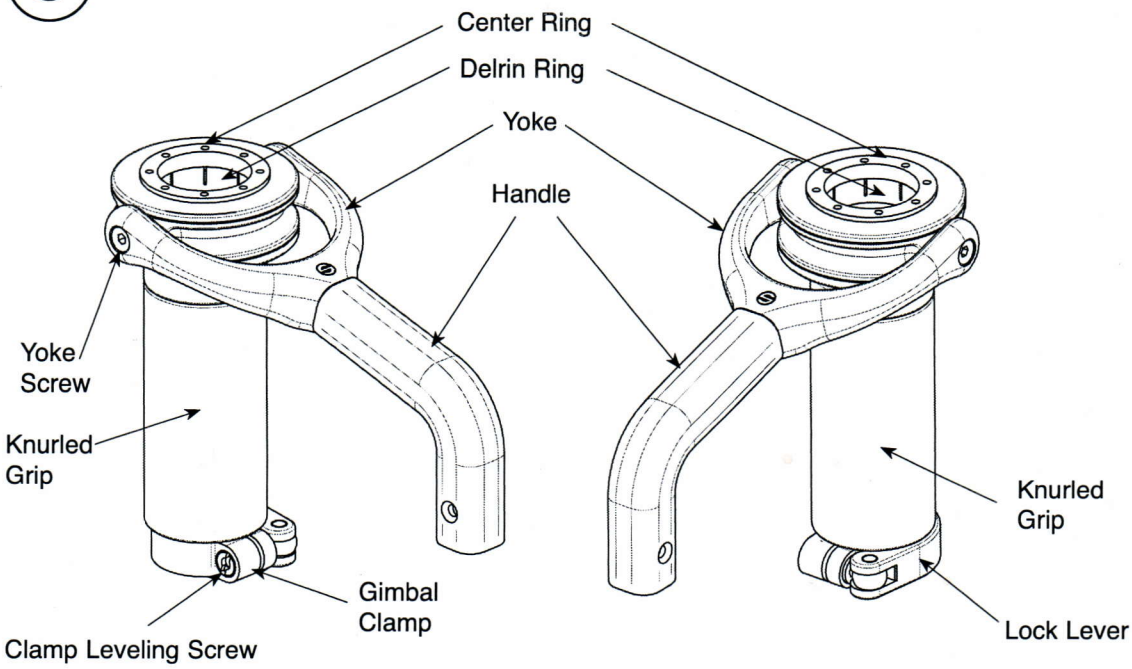

Opening the Gimbal Clamp (No-Tool Version)

To modify the position of the gimbal at the center post, you must open the gimbal clamp. Open the lock lever of the quick lock, choose your new position and close the lock lever.

Note:
The clamp effect can be re-adjusted. Don't over-tighten the leveling screw; otherwise the clamp effect becomes too strong.

Adjustment of the Gimbal Friction
The **artemis** gimbal has an adjustable center ring.
A Delrin ring guarantees perfect position of the gimbal on all 1.5" center posts.
A side effect of this function is a kind of friction that prevents the gimbal from rolling on the center post during re-positioning.

Adjusting the Center Ring
Remove the side to side module using the post tool.
Open the gimbal clamp and pull the gimbal off the post until you can see the Delrin ring. Now you can reach the Delrin ring and adjust it. Clockwise rotation increases the friction, counter-clockwise rotation decreases the friction.

Note: To ensure proper centering the Delrin ring must not be too loose!

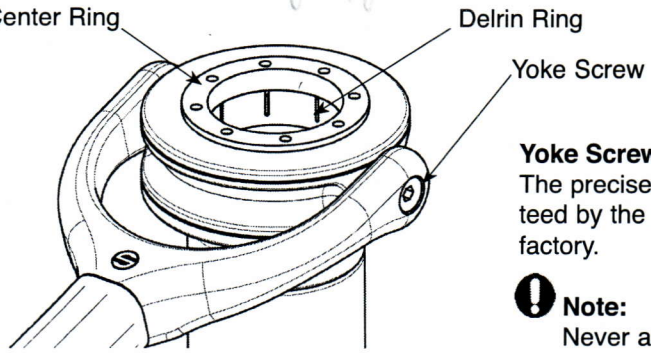

Yoke Screws:
The precise intersection of the axes is guaranteed by the yoke screws, pre-adjusted at the factory.

Note:
Never adjust these screws yourself.

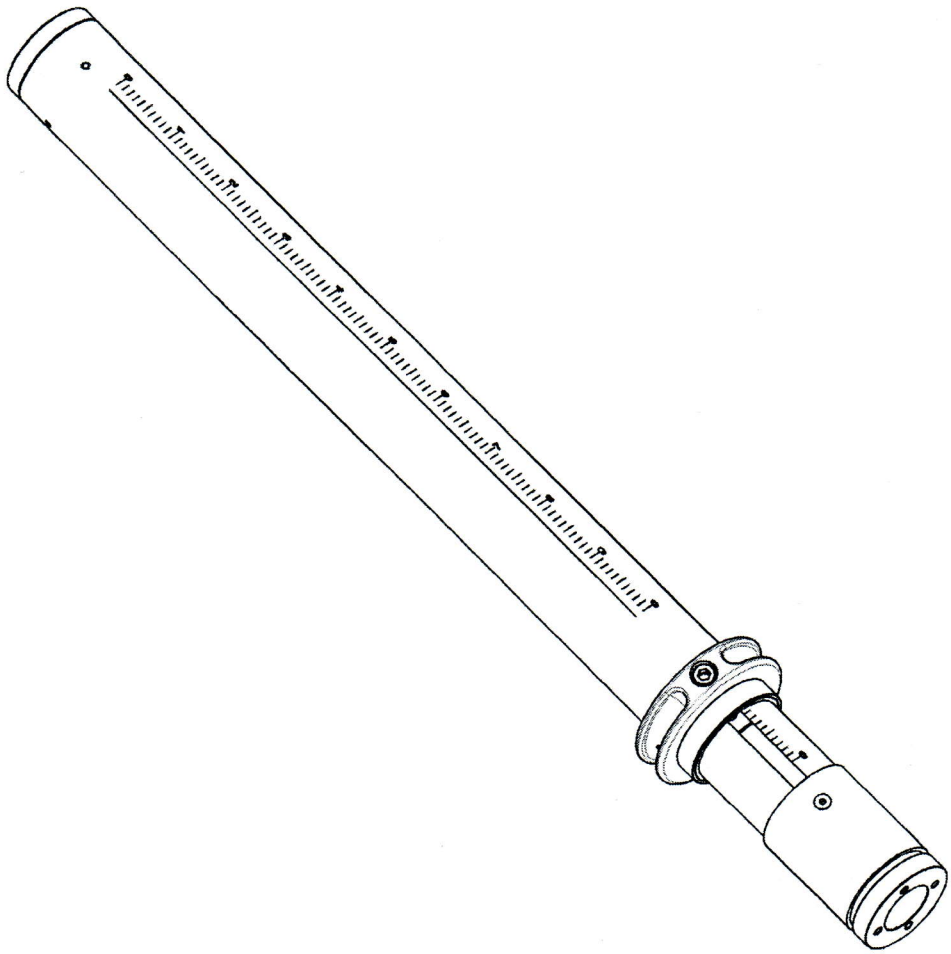

Version:1.1/01/04
Ausgabedatum / Issue date:01/04
Bestellnr./ Order no.:sbs18t130a

sachtler GmbH &Co.KG
Gutenbergstrasse 5
D-85716 Unterschleissheim
Germany
Telefon: (+49 89) 32 15 82 00
Telefax: (+49 89) 32 15 82 27
E-Mail: contact@sachtler.de
Homepage:http://www.sachtler.com

Postfach / P.O.BOX 1648
D-85706 Unterschleissheim
Germany

Overview

All external diameters of the artemis 1.5" (38.1 mm.) center post meet US standard.
You can use all accessories designed for this diameter dimension.
The center post is extendable from 42 cm (16,53") to a maximum of 71 cm (27,95")
and protected against torsion by a guiding shaft. All cables run inside the center post.
Fine threads at the ends of the center post facilitate quick dismantling of the side to side module and the lower sled module.
Thus you can quickly turn the gimbal to low mode, change the modules easily and use a super post.

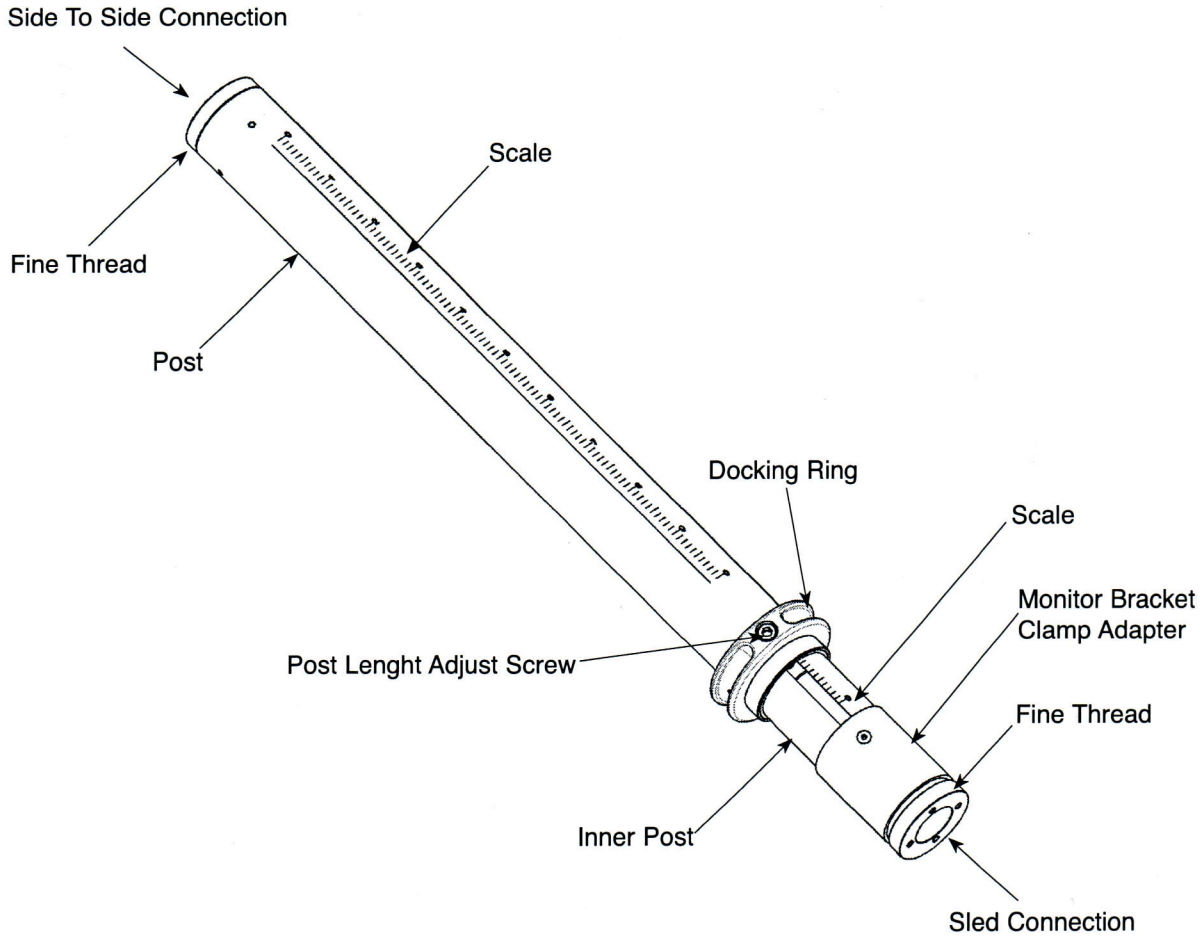

The center post has a docking ring where you can put down the rig in the docking bracket, when working in low mode.
Post and inner post are calibrated for better orientation.
On these scales you read off the position of the gimbal and the length of the center post.

Monitor Bracket Clamp Adapter:
This freely adjustable plastic jacket has an external diameter of 1.5" to allow to mount the monitor.

Post Connection

The connect/disconnect assembly between side to side module and lower sled is called post connection. It is a screw joint with fine thread.
Guide pins adjust the center post towards the modules.
During assembling the shaft guide of the inner post must always point backwards.

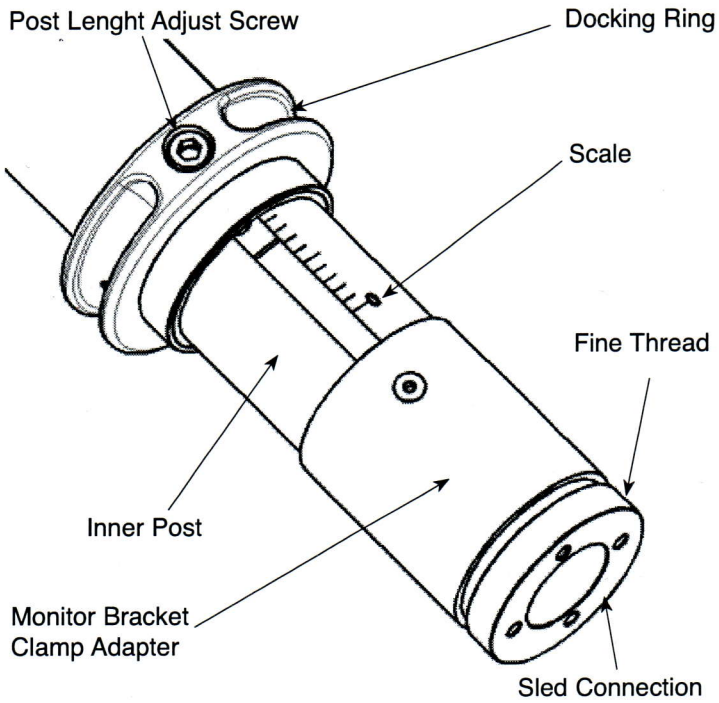

Extending the Center Post

To modify the center post length open the post length adjust screw inside the docking ring with a 4 mm (5/32") Allen wrench.

One counter-clockwise rotation is enough to open the clamp. Extend to desired lenght and re-tighten the screw

Note:
Do not turn out the screw too far; otherwise the torsion protection can fall off.

Note:
Do not use too much force as the clamping provides the necessary cohesion quickly.

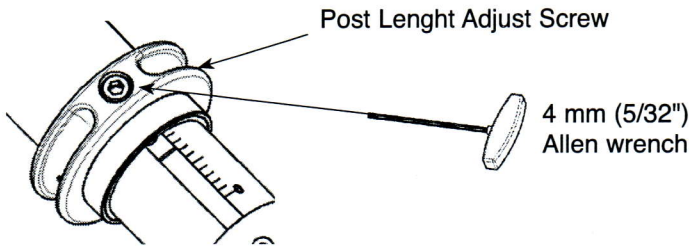

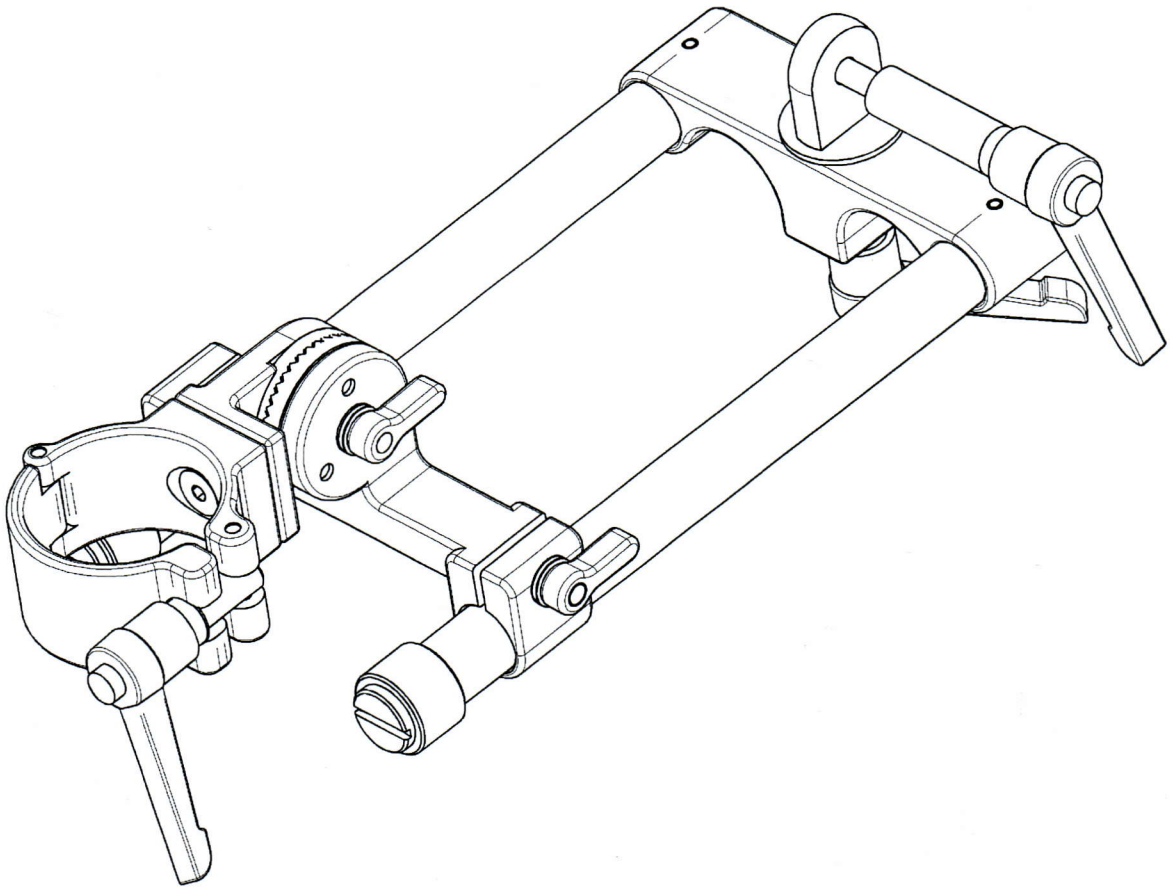

Version:1.1/01/04
Ausgabedatum / Issue date:01/04
Bestellnr./ Order no.:sbs18t150a

sachtler GmbH &Co.KG
Gutenbergstrasse 5
D-85716 Unterschleissheim
Germany
Telefon: (+49 89) 32 15 82 00
Telefax: (+49 89) 32 15 82 27
E-Mail: contact@sachtler.de
Homepage:http://www.sachtler.com

Postfach / P.O.BOX 1648
D-85706 Unterschleissheim
Germany

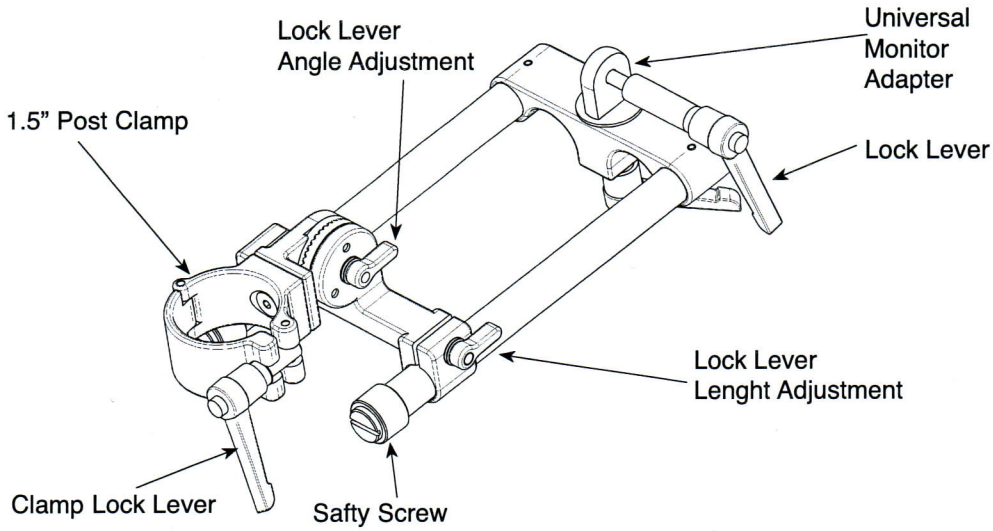

The Sachtler monitor bracket will fit on all systems using a 1.5" diameter post.
It can be mounted at the center post or at the inner post using a monitor bracket clamp adapter.
To mount or changing position of the monitor bracket open the clamp lock lever and open the clamp.

Note:
Do not over-tighten the clamp lock lever, the post might be bended too much.

Length adjustment

To change the length of the telescopic monitor bracket, open the lock lever, set the needed length and make sure that the lock lever has been tightened again.

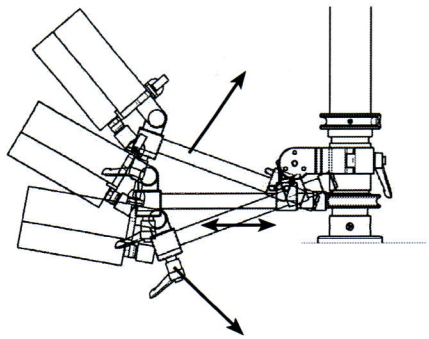

Angle adjustment
This bracket allows changing the angle of the complete monitor mount.
This feature can be very helpful to bring the monitor in a better viewable position, e.g. low mode operation.
To change the bracket angle open the lock lever, change the angle to the needed position and make sure that the lock lever is tightened again.

Flipping the bracket

For low mode operation the monitor bracket can be flipped around.
First screw off the safety screws at the end of the bracket.
After loosening the length adjustment screw the rods can be pulled off and turned around.

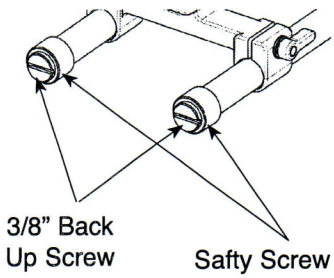

Note:
Make sure that the safety screws are re-mounted and the lock lever has been tightened again after this operation.

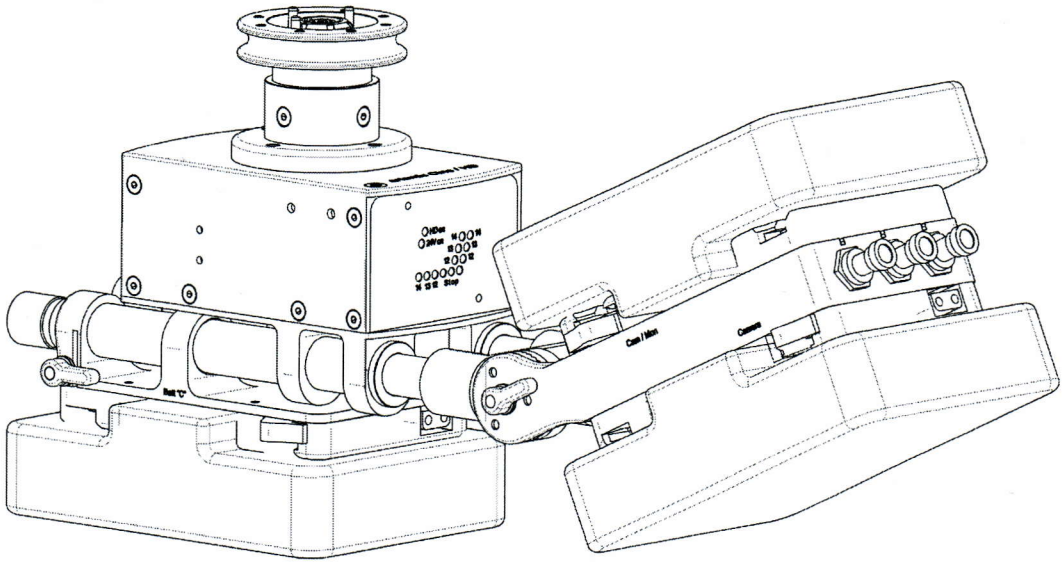

Version:1.1/01/04
Ausgabedatum / Issue date:01/04
Bestellnr./ Order no.:sbs18t170a

sachtler GmbH &Co.KG
Gutenbergstrasse 5
D-85716 Unterschleissheim
Germany
Telefon: (+49 89) 32 15 82 00
Telefax: (+49 89) 32 15 82 27
E-Mail: contact@sachtler.de
Homepage:http://www.sachtler.com

Postfach / P.O.BOX 1648
D-85706 Unterschleissheim
Germany

Overview Lower Sled Module

The lower sled includes following functions:
Interface to the center post, battery mounts, dual dynamic balance, electronic circuits and connections, mounts for accessories.

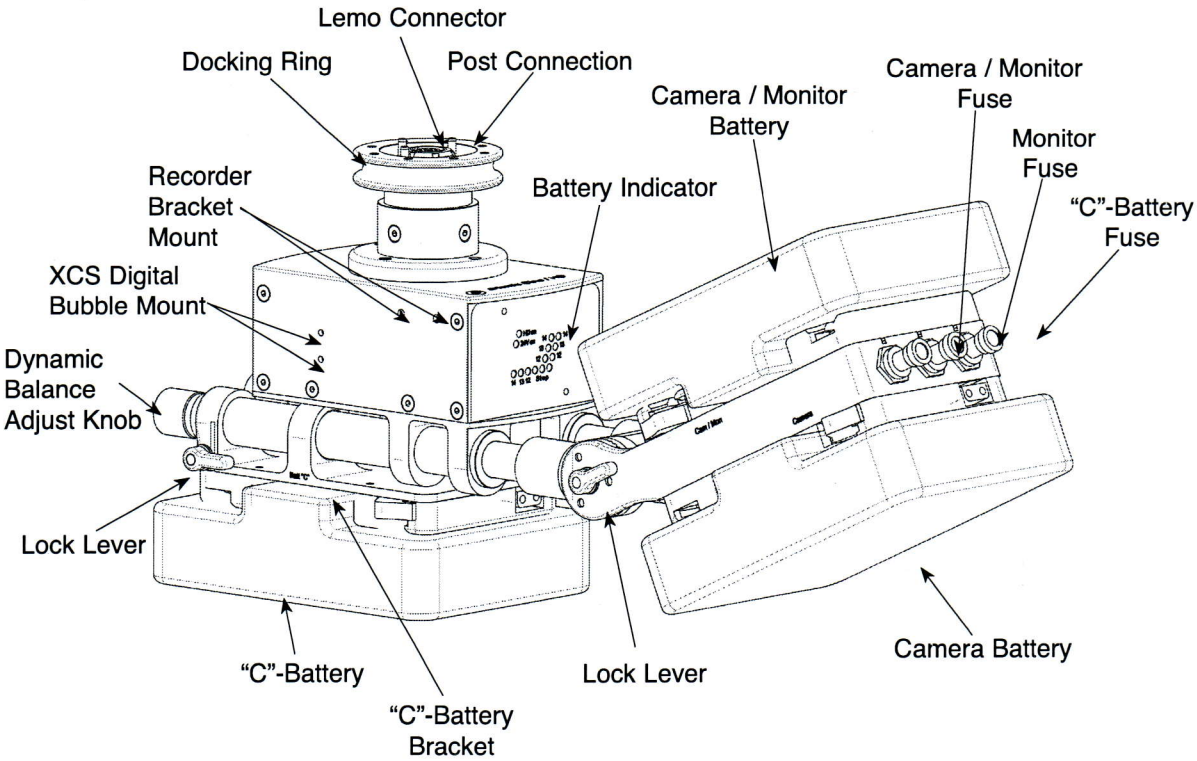

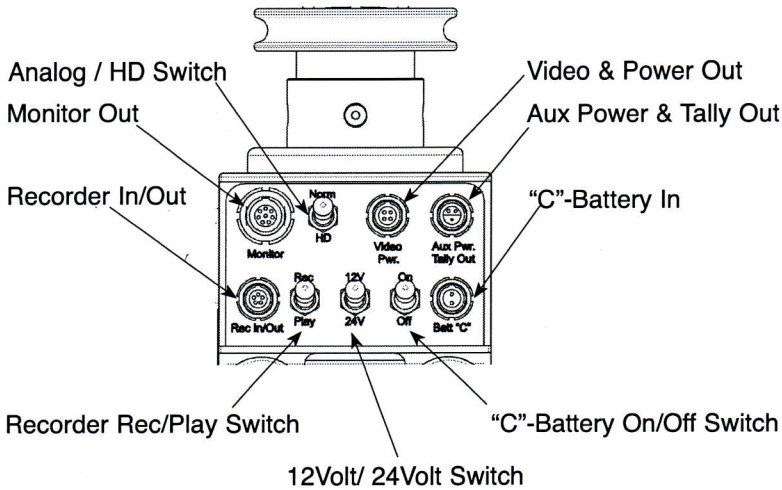

Inputs, Outputs and Further Functions

All inputs and outputs and all functional switches are located at the front of the sled.

Note:
All switches have lock mechanisms!!!
Before you can switch between functions, you must release the lever by carefully pulling the lever of the switch. Do not use unnecessary force; otherwise you could break the switch.

Monitor Out
This output meets the standard set by George Paddock and XCS. You can use this output for all monitor types complying with this plug standard.This output provides 12 VDC and video signal for the monitor. Depending on model, it can also provide RGB video and SDI video signals.

HD / Norm Switch
This switch is only available with HD versions.
It is used to select analog or HD mode. In HD mode, all video signals are directly transmitted to the monitor. The functions Video/Pwr, Recorder In/Out and Rec/Play are deactivated.
Note: Before you can use all those functions while working with analog technology, the selector switch must be set on "Norm".

Rec In/Out:
You can use this output for an external DV or High-8 recorder.
The monitor signal for the recording is provided and later the play-back signal of the recorder can be watched on the monitor using this input. This output supplies 12 VDC.
We recommend using the onboard battery to supply the recorders.

Rec/Play Switch
With this switch you select the origin of the video source. In "Rec" position the camera signal is transmitted to the monitor, video power out and the recorder simultaneously. To watch the recorded play back, select "Play". To return to normal working mode, select "Rec".

Video / Power
This port supports video transmitters. This output provides the monitor signal and 12 VDC for the video transmitter.

Aux Pwr / Tally
This output has two functions.
You can either use it to plug in the lower tally light or to supply external consumers with 12 VDC up to 3 Amps.

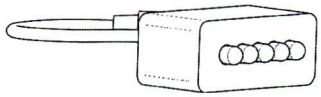

„C" Battery On / Off
This switch activates the **C-Battery**.
At the same time, it diverts power supply of monitor, video transmitter and other video consumers from the **Monitor-Camera Battery** to the **C-Battery**.

12V / 24V Switch
This switch increases the camera power supply from 12 VDC to 24 VDC.
Only the camera power sockets provide 24 VDC, all other sockets still provide 12 VDC.

Power Supply

There are up to three battery mounts at the lower sled module to mount the available Anton Bauer, PAG and V-Mount batteries.
As the **artemis** system has separated circuits for camera and monitor supply you must always use two batteries.
The separation of the circuits reduces noise in the video signal and clarifies the total running time of the individual batteries.
Due to this separation there are two different consumer groups. The first group includes video signal processing components, such as monitor, video transmitter, frameline generators, video distributer, and video assists.
The second group encloses mechanical consumers, such as camera, focus remote, onboars lights, tally control.

Note:
For not disturbing these separated circuits, consumers involved in video signal processing should not be supplied by outputs that are intended to distribute power to the camera.

The **Monitor- Camera** battery and/or the **C-Battery** distributes power to following outputs:

Lower Sled Module:
Monitor Out 12 VDC
Video Power Out 12 VDC
Recorder In / Out 12 VDC

Side To Side Module:s
Video Power Out 12 VDC

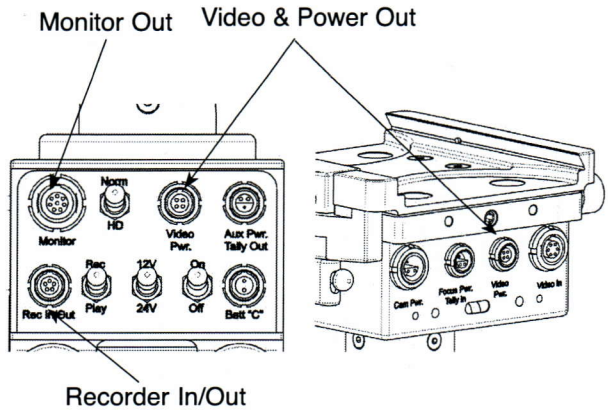

The „**Camera-Battery**" distributes power to following outputs:

Lower Sled Module:
Aux Power Out 12 VDC / Tally Out

Side To Side Module:
Aux Power Out 12 VDC / Tally Out
Camera Power Out 12 VDC & 24 VDC
Focus Power Out 12 VDC

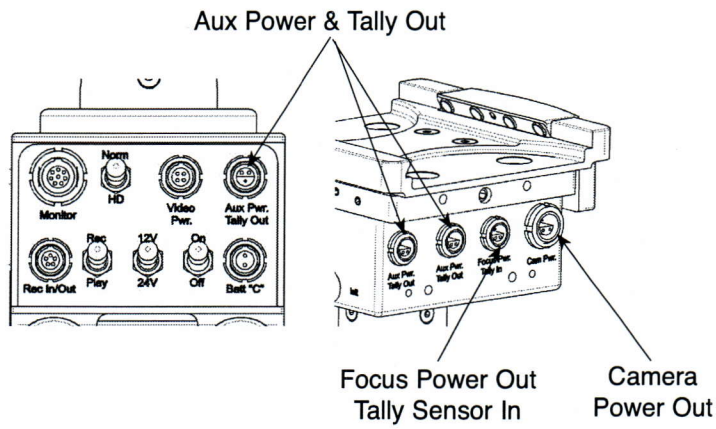

Batteries

Besides using two or three batteries of the same type, such as "Proformer" and "TrimPac" Ni Cd batteries or "Hydron 50" and "Hydron 100" Ni MH batteries, you may also combine all types of NiCd batteries, such as AB "Proformer" and "TrimPac".
A combination of NiCd batteries and NiMH batteries, such as "Hydron 50" and "Hydron 100", is possible as well.

Note:
But for safety reasons you should **never** consider a combination with NiCd, NiMH battery types and Lithium batteries!

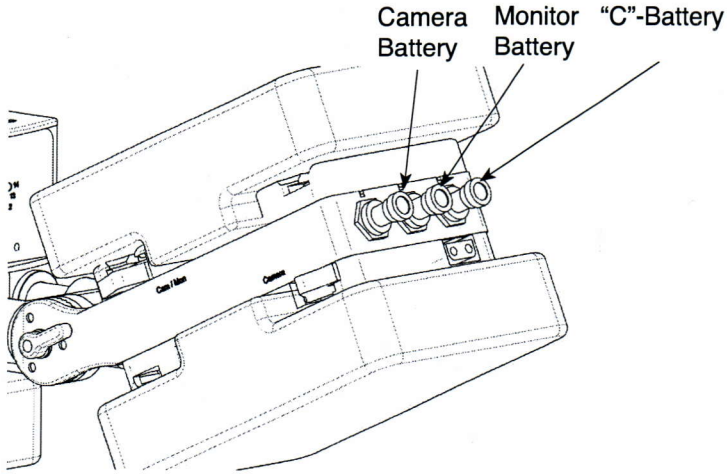

Fuses (Breaker)

Each battery has its own fuse. The electric circuit is closed by pressing the fuse and opened by pulling the fuse.

Note:
Do not use to much force for this operation!

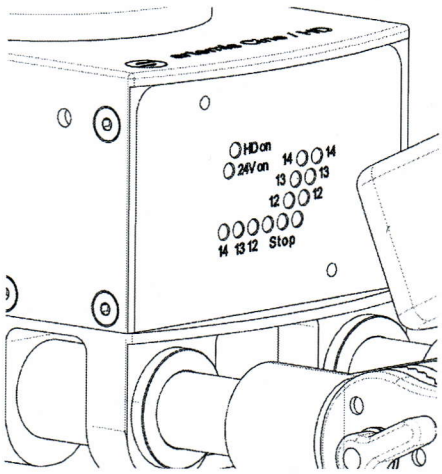

Battery Indicator

The battery indicator informs you about the remaining power in each battery.

When the last red LED light starts blinking, the voltage has fallen to 11.9 VDC and the battery must be changed immediately.

Depending on the sled model there is an indicator where you can read off whether
HD mode and 24 Volt mode are activated.

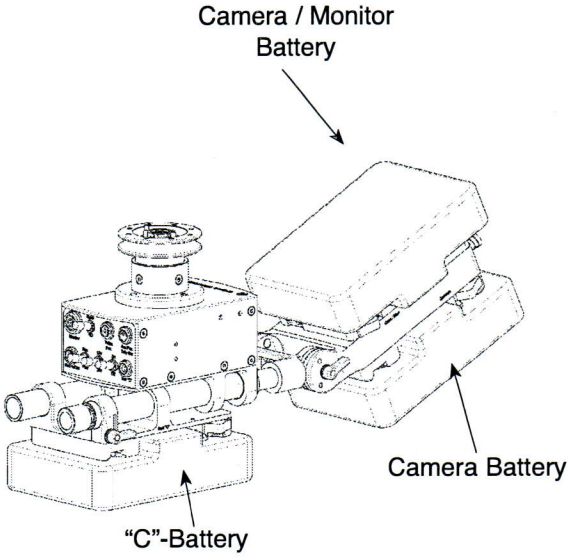

Battery Combinations

As pointed out above, always two batteries must be mounted.
There are following combinations:

- **Mon-Cam Battery** plus **Camera-Battery**
- **Camera-Battery** plus **C-Battery**
- **Mon-Cam Battery** plus **Camera-Battery** plus **C-Battery**

Combination for
12 Volt Mode Using a CRT Green Monitor

In this case two batteries are used on the pivoting battery mount.
In **mon/cam** position, the upper battery supplies only the video circuit, such as monitor, video transmitter, etc., with 12 VDC.

In **camera** position, the battery at the bottom supplies only the camera circuit, i. e. camera, focus remote and "aux power" outputs, with 12 VDC.

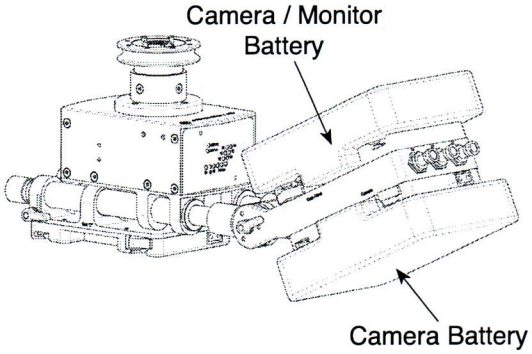

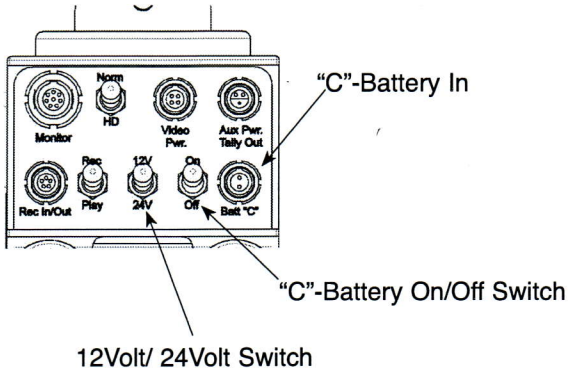

Switches:

The selector switches for **C-Battery** must be set on **"OFF"** and the **voltage selector** at the front of the sled must be set on **"12 Volt"**.

Combination for 12 Volt Mode Using a Flatpanel Monitor

In this case one battery is used with the pivoting battery mount, the other with the C-battery bracket.

In **camera** position, the battery at the bottom supplies only the camera circuit, such as camera, focus remote and "aux power" outputs, with 12 VDC.

In **C-battery** mount, the front battery supplies only the video circuit, such as monitor, video transmitter, and others, with 12 VDC.

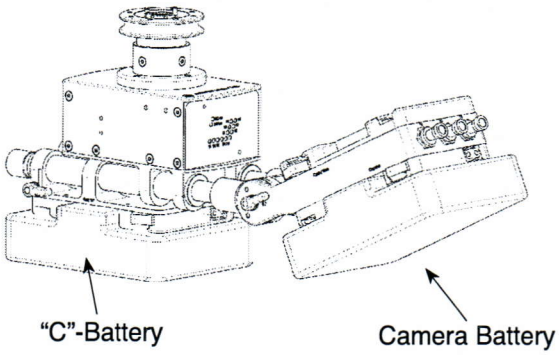

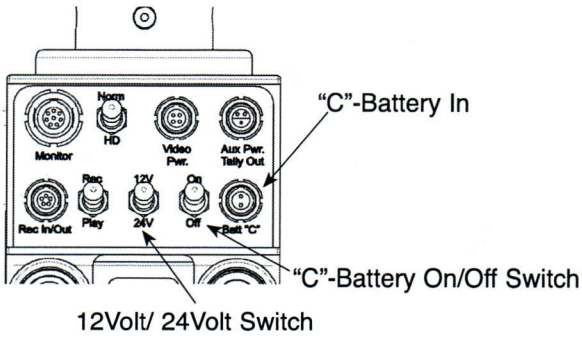

Switches:

To activate this combination, you must plug in the C-battery, switch on the fuse of the **C-battery** and set the C-battery switch on "**ON**". Additionally, the voltage selector switch must be set on "**12 volt**".

Combination with Three Batteries in 12 Volt Mode

When you use heavy cameras, a flat panel monitor or you want to operate an
extremely short rig, we recommend working with all three batteries.
With this combination all battery mounts are equipped with batteries.

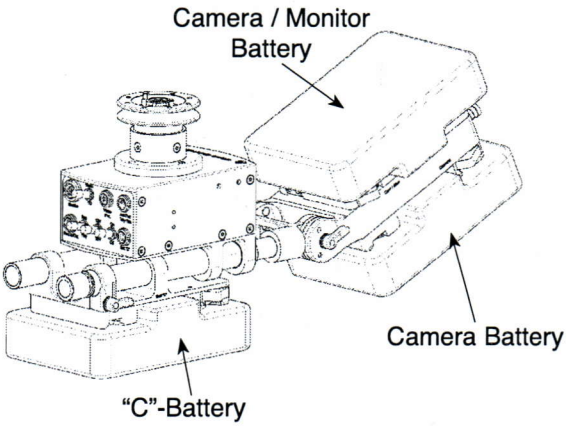

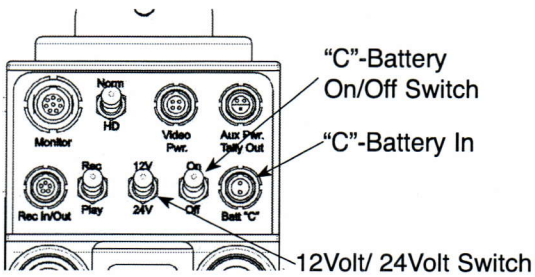

Switches:
Set the voltage selector switch on "**12 Volt**", plug in the **C-battery** and set the "**C-battery** ON/OFF" selector switch on "**OFF**".

As in the standard combination with 12 VDC the two batteries at the rear supply the camera and monitor circuits independently now.
The C-battery at the front is not involved in power supply and serves only as ballast.
When the monitor battery becomes exhausted after some time of operating, it is not required to change the battery. Instead, you can simply divert the monitor power supply to the front battery by setting the C-battery on "ON".
This additional feature can prevent an unexpected monitor breakdown and is especially helpful during studio productions or sport live broadcasts.

Combination for 24 Volt Camera

This combination requires two different voltages, 24vdc for the camera and 12 VDC for the remaining functions.
Both batteries of the pivoting battery mount are connected and supply the 24 VDC camera power.
Combination of both batteries provides not only 24 VDC power for the camera but also 12 VDC for focus remote and the aux power outputs.
To use these voltages the fuses of the **Camera Battery** and the **Monitor-Camera Battery** must be pressed.
Additionally, the 12V/24V selection switch at the front of the sled must be set on "24V". Now the front battery in the **C-Battery** mount provides 12 VDC for the video circuit, such as monitor, video transmitter etc.

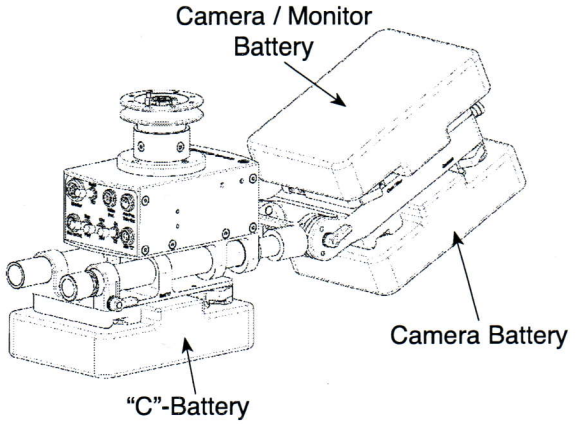

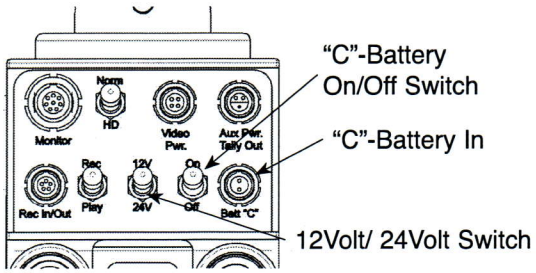

To activate this combination, plug in the C-battery, push the C-battery fuse and set the "C-battery ON/OFF" selector switch on "ON". Then select "24 Volt" using the voltage selector switch.

Note:

In 24 Volt mode both batteries at the rear, **Camera Battery** and **Monitor-Camera Battery**, are connected.
You should only use batteries with the same charge.
Batteries with different charges would start to charge each other and thus affect the total running time of the batteries.
When shooting with ARRI 435 or ARRI LT cameras in highspeed and using Ni MH batteries we recommend a combination with one Ni Cd battery.
The "Ni MH" battery may not process the high starting currents of the ARRI cameras mentioned above.
Lithium batteries might be unable to speed up this kind of cameras.
Never use combinations of Lithium batteries with other battery types like Ni Cd or NiMh

Dynamic Balance Overview

Modification of the Setting Angle of the Pivoting Battery Mount

Opening, i.e. turning the little lock lever to the left, loosens the rosette of the mounting support, after a couple of counter-clockwise rotations it will be completely open.
By turning the lock lever to the right, the mounting support can be blocked again.

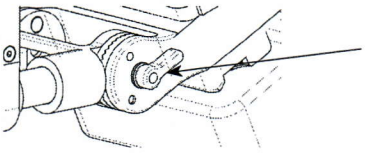

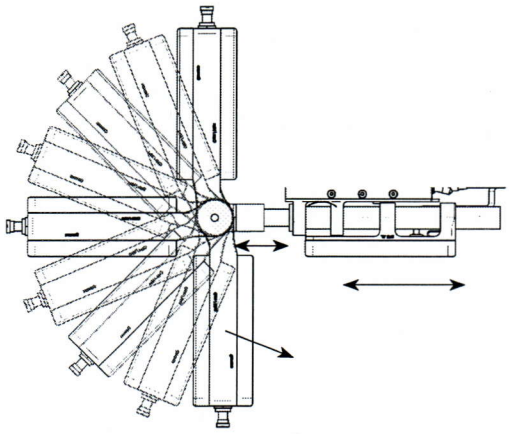

Dynamic Balance

To modify the dynamic balance of the rear battery mount turn the dynamic balance adjust knob until you reach the desired position. This adjustment is self-securing and needs no further clamping.

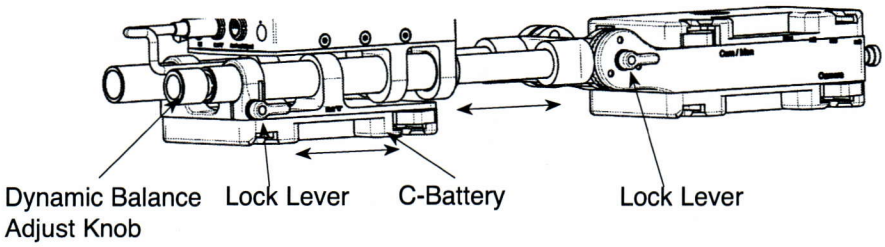

Dual Dynamic Balance

The dual dynamic balance is created by independent adjustment of the pivoting battery mount and the C-battery.
The role of the C-battery is crucial. As long as it is mounted centrally under the center post, it serves only as extra ballast.
But as soon as it is moved, or turned and moved, the C-battery influences the overall balance of the system.
The pivoted battery mount at the rear also influences the system balance depending on its angle of inclination.

C-Battery Bracket

The C-battery bracket can be freely placed on the rods at the bottom.
To open the clamp, turn the little lever to the left with one full rotation. Determine the new position and turn the lever to the right to re-tighten the clamp.

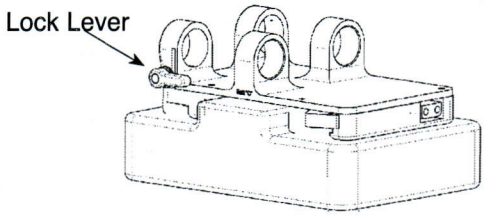

Caution:
The clamp effect is very strong. Please do not over-tighten; otherwise the internal rods could be blo-

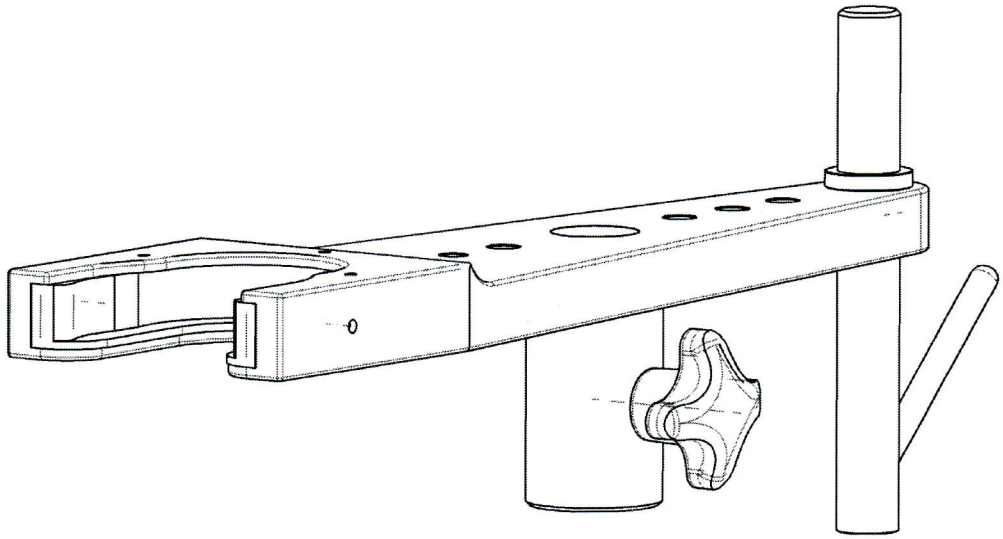

Version:1.1/01/04
Ausgabedatum / Issue date:01/04
Bestellnr./ Order no.:sbs18t200a

sachtler GmbH &Co.KG
Gutenbergstrasse 5
D-85716 Unterschleissheim
Germany
Telefon: (+49 89) 32 15 82 00
Telefax: (+49 89) 32 15 82 27
E-Mail: contact@sachtler.de
Homepage:http://www.sachtler.com

Postfach / P.O.BOX 1648
D-85706 Unterschleissheim
Germany

Overview

The docking bracket allows to mount the rig on a stand, to adjust the rig, and to park the arm.

Note:
Use only appropriate steel stands, such as a "C-Stand", and protect the stand against tipping using a sandbag.

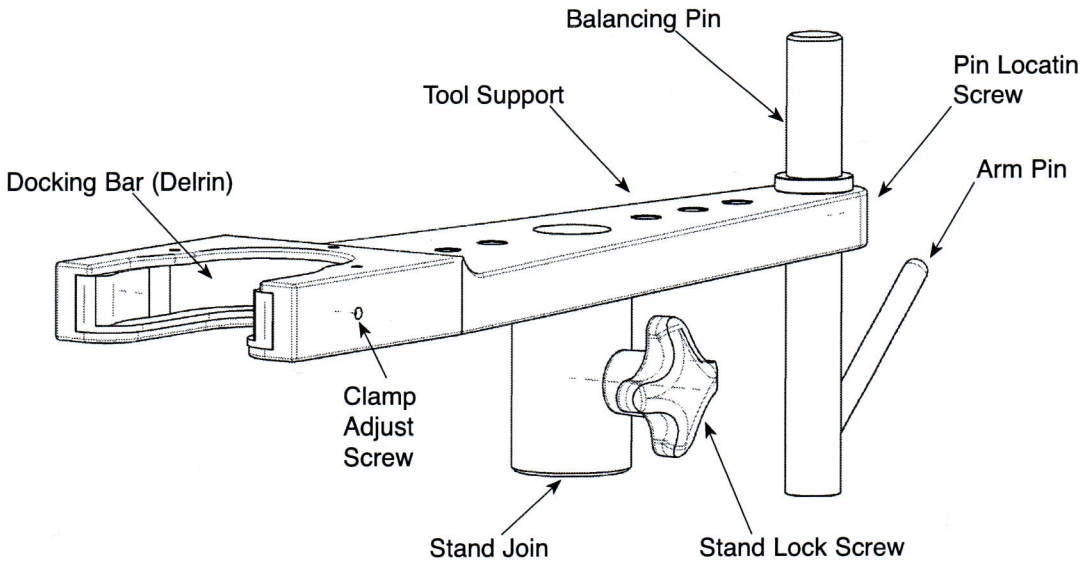

Stand Assemby
The stand joint is designed for stands with ø 16 mm pins.
Put the docking bracket on the stand pin and tighten the lateral stand lock screw accurately

Taking the Rig In and Out
The artemis docking bracket has a locking mechanism wich prevents the rig from falling out of the bracket without requiring a quick pin support.

Insert the rig from above into the docking bracket in such a way, that the docking ring lies in the docking bar.
Now push the rig into the docking bracket from the front of the docking bar, until you can feel that it has clearly engaged.

To take the rig off the docking bracket again, pull the rig to the front and take it out of the docking bracket by lifting it up.

Storage of the Arm
Put the arm post on the arm pin to hang the arm from the docking bracket.
This balance pin / arm pin can be turned in the direction you prefer by loosing the pin location screw.

Service Note:
To re-adjust the clamping strength of the docking bar use the lateral clamp adjust screws.

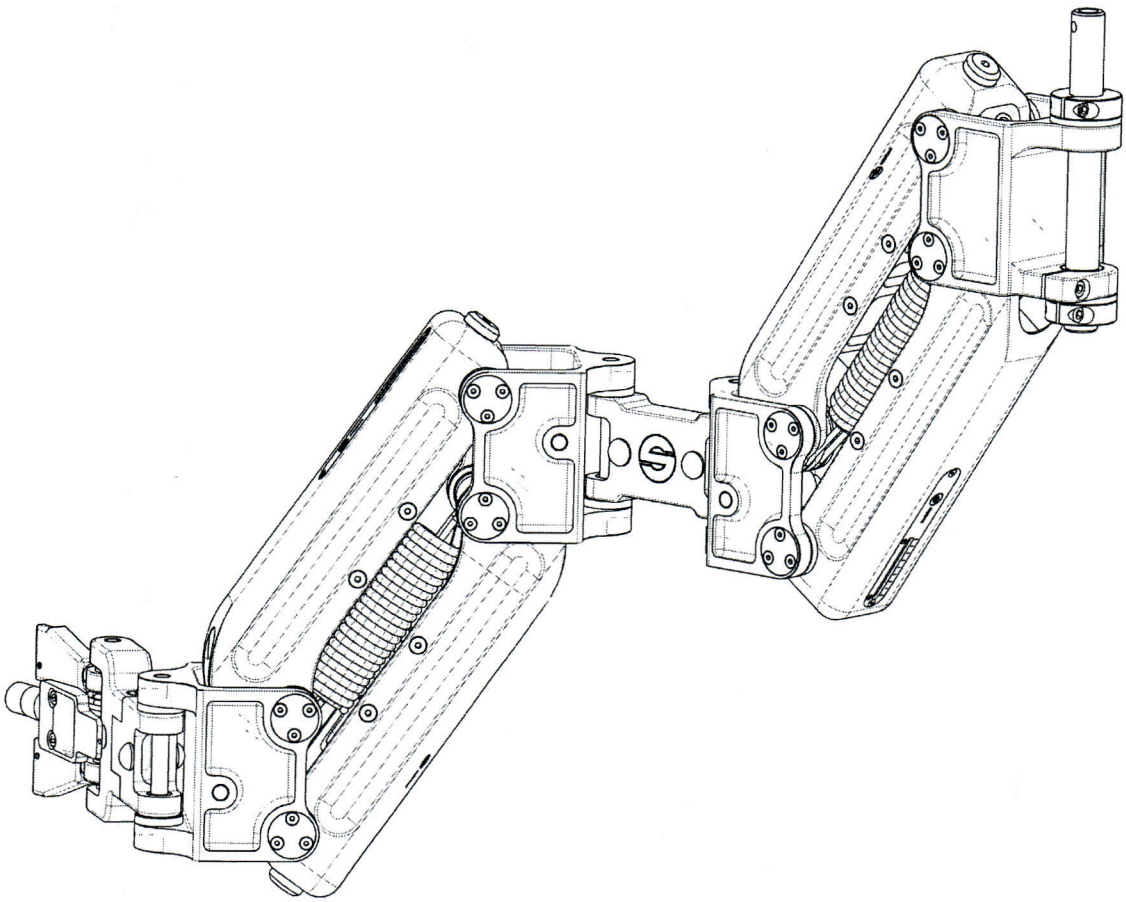

Version:1.1/01/04
Ausgabedatum / Issue date:01/04
Bestellnr./ Order no.:sbs18t210a

sachtler GmbH &Co.KG
Gutenbergstrasse 5
D-85716 Unterschleissheim
Germany
Telefon: (+49 89) 32 15 82 00
Telefax: (+49 89) 32 15 82 27
E-Mail: contact@sachtler.de
Homepage:http://www.sachtler.com

Postfach / P.O.BOX 1648
D-85706 Unterschleissheim
Germany

Overview

artemis arms are fully compatible with systems of other manufacturers using US standard. Both the titanium vest connection (mating block) and the 5/8" arm post (15.8 mm) meet this standard.
The **artemis** arm consists of two connected segments, each forming a parallelogram that contains a set of springs.
The different combination of those spring sets determine the payload classes of the arms.

This arm contains 44 ball and pin bearings ensuring absolutely low-friction flexibility of all individual segments. Avoid extreme conditions to prevent the bearings from becoming dirty. If the bearings got extremely dirty, please take the arm in for certified Sachtler service.

Note:
For safety reasons it is prohibited to open the arm!

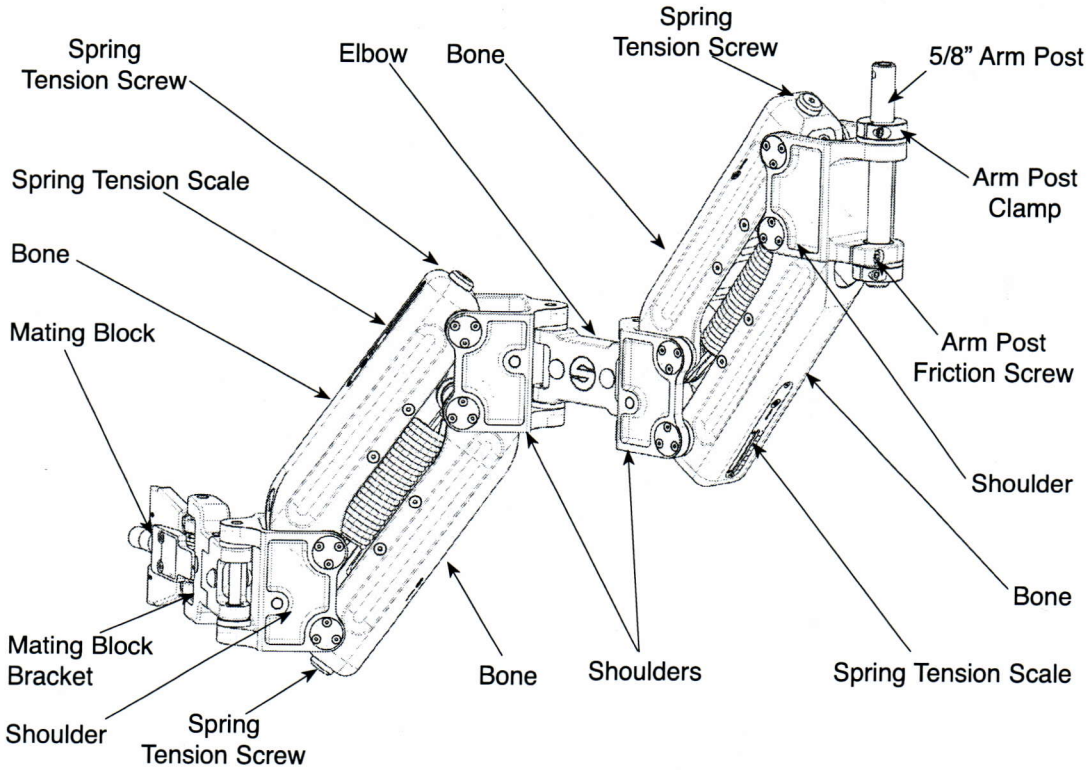

Danger:
As strong forces emerge inside the arm, never reach into the arm during operation.

Turning Over the Mating Block Bracket

The arms are set up for right hand operators ex factory.
To make the arm operational for left hand operators the mating block bracket must be turned over.
For this modification you need a 4 mm (5/32") Allen wrench.
Open the mating block bracket screw that connects the mating block bracket with the arm.
Remove the screw and turn the mating block bracket over.
Then put the screw carefully in and tighten accurately.

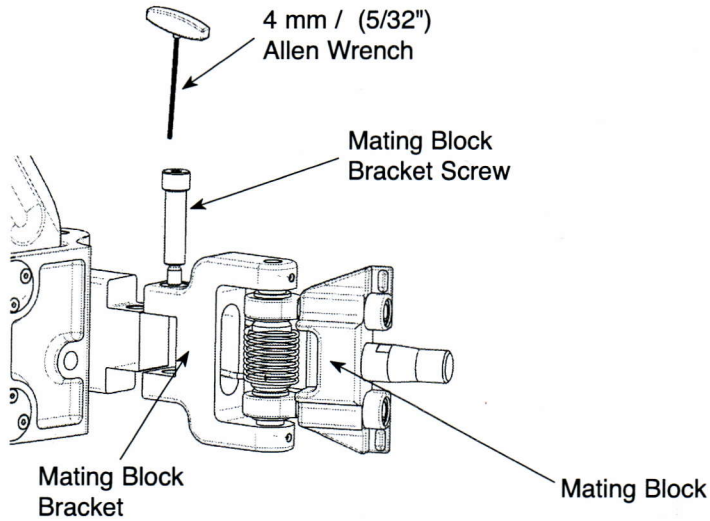

Changing the Arm Tilt Angle

By manipulating the tilt adjustment screws with a 6 mm Allen wrench the tilt angle of the arm can be adjusted to the operator's body. Through counter-clockwise rotation of the tilt adjustment screw the ball joint runs farther out of the mating block, through clockwise rotation of the tilt adjustment screw it runs deeper into the mating block. The tilt angle results from the different positions of the two ball joints.

Note:
Change only the position of one ball joint, i.e. withdraw it from the mating block.
The second ball joint should lie against the mating block.

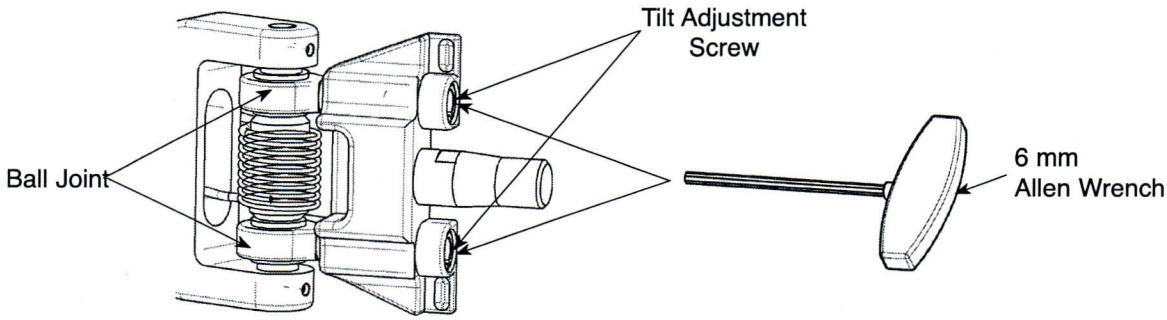

Changing the Spring Tension

The spring tension of both segments is performed with the arm tension screws using a 4 mm (5/32") Allen wrench.
Clockwise rotation increases the spring tension, and counter-clockwise rotation decreases it.
For better orientation, there are scales at all four sides of the arm where you can read off the initial tension in the springs.
Each set of springs should have the same initial tension in itself.
Be sure that both the upper and the lower scales show the same tension value.

Note:
When the arm is not in use all springs must be relaxed.

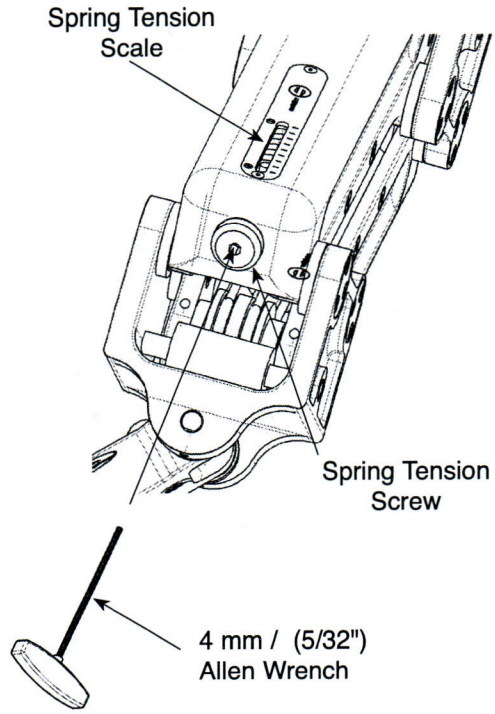

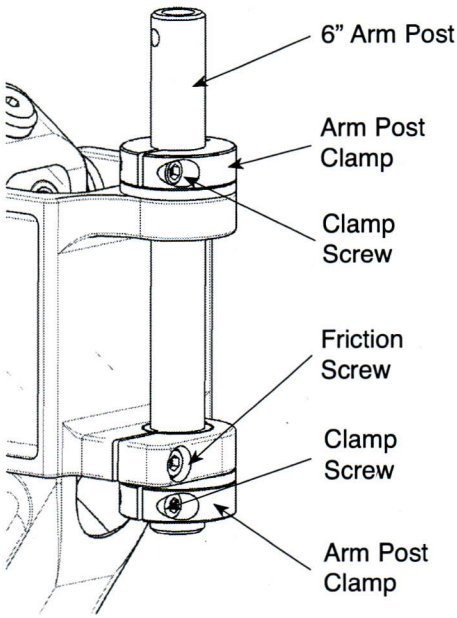

Changing the Arm Post Friction

You can change the friction of the arm post from completely fixed to completely free.
To change the friction you need a 4 mm (5/32") Allen wrench.
Through clockwise or counterwise rotation of the friction screw the friction can be changed in any desired way.

Dismantling the Arm Post

To dismantle the arm post or to change its position you need a 4 mm (5/32") Allen wrench.
After opening the clamp screw of both arm post clamps and loosening the friction screw, you can remove or re-position the arm post.

Note:
Make sure that the clamp screws are re-tightened.

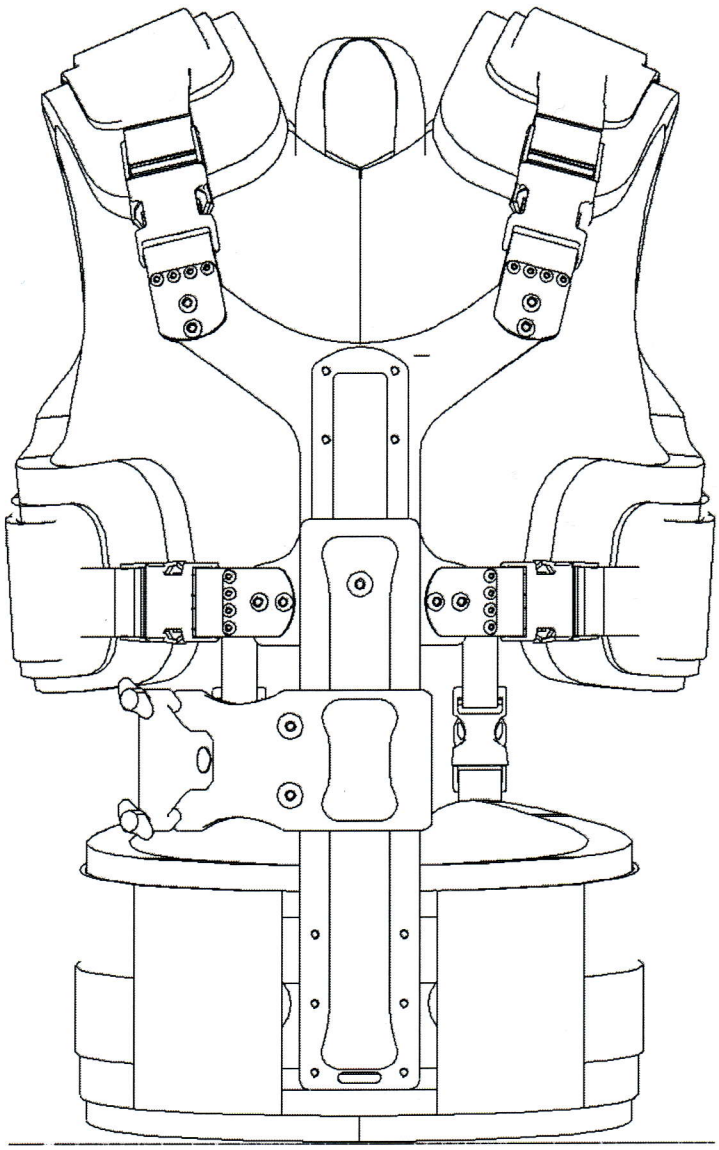

Version:1.1/01/04
Ausgabedatum / Issue date:01/04
Bestellnr./ Order no.:sbs18t220a

sachtler GmbH &Co.KG
Gutenbergstrasse 5
D-85716 Unterschleissheim
Germany
Telefon: (+49 89) 32 15 82 00
Telefax: (+49 89) 32 15 82 27
E-Mail: contact@sachtler.de
Homepage:http://www.sachtler.com

Postfach / P.O.BOX 1648
D-85706 Unterschleissheim
Germany

Overview:

The **artemis** vest offers a large number of adjustments to enable a custom fit for every operator. The design of the vest allows slipping into the vest from both sides. You do not have to change your habits.
Using Velcro-backed straps at the vest, an easy length adjustment of every single strap is possible. Via the pivoting buckle mounts at the breast plate you can adjust the artemis vest perfectly to your body.
The chest dovetail is continuously adjustable.
By placing the buckle of the waist belt at the back of the vest, the bridge makes full length use of the chest dovetail.

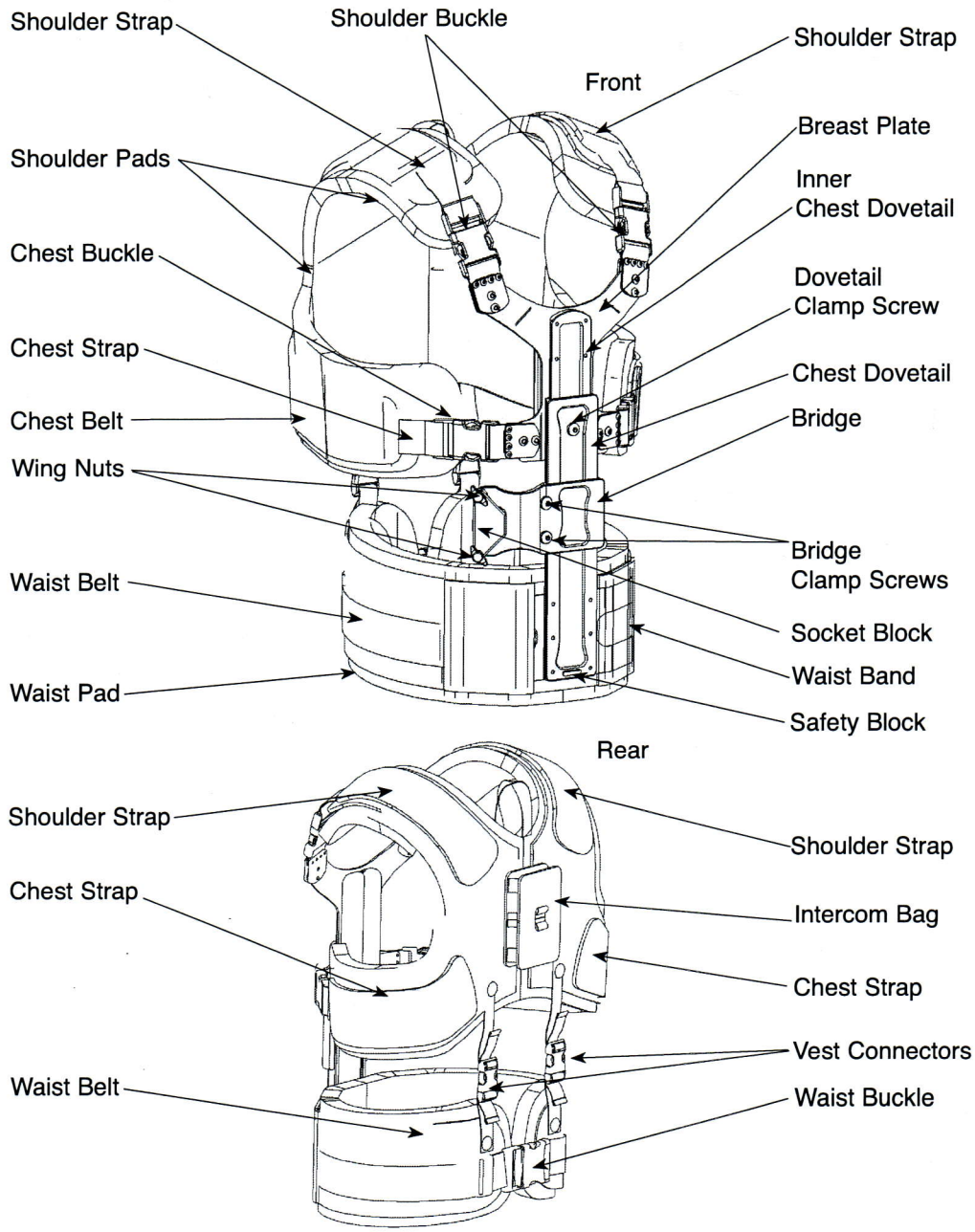

Before first use, some basic adjustments have to be done.
Minor corrections will probably be made during the fiirst few days of use till a comfort level is achieved.

- Open the chest and shoulder buckles first (e.g. left side)
- Slip your right arm through the closed side of the vest.
- Pull the open strap over your shoulder, and engage the buckle.
- Pull the open strap around your chest, and engage the buckle.
- Adjust the length of the shoulder straps.
  The vest should be placed right under your chest.
  The shoulder strap might be too short if the chest strap is not straight around your chest.
- To adjust the shoulder straps length, pull the Velcro-backed shoulder straps off the vest and bring it in a new position.

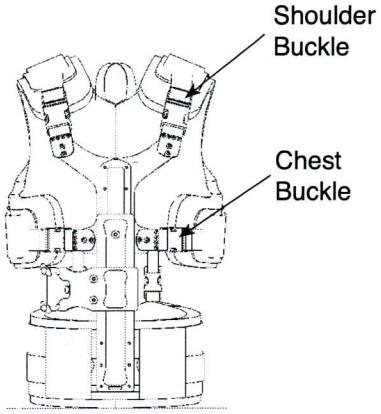

After setting the shoulder straps, adjust the tension of the chest belts.

- To change the chest belts length pull the Velcro-backed chest straps off the vest and bring it in a new position
- Increase the tension of the chest straps by pulling the belts.
- Close the waist belt buckle. The waist band should be right in middle of your waist.
- Increase the tension of the waist belt by pulling the belt.

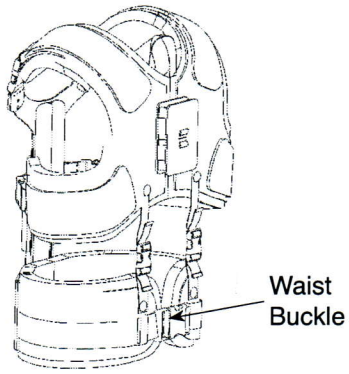

To get a good position for the waist belt the chest dovetail length has to be adjusted.

- Turn the dovetail clamp screw using a 4 mm (5/32") Allen wrench counter-clockwise to loosen the clamp of the dovetails.
- Slide the dovetails up or down till you reach the right length.
- Tighten this screw again using a 4 mm (5/32") Allen wrench.

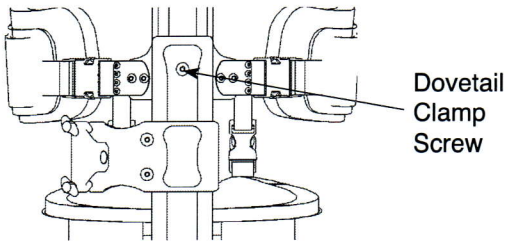

- Tighten all belts of the vest. The vest should be snug enough to allow almost no movement within.

If you feel any discomfort loosen the vest slightly.

There are different ways of wearing the vest.

Take your time and try different adjustments of the vest.

Bridge Adjustments:

Rotating the bridge:
The socket block is directed to the right side of the vest ex factory.
To operate on the other side the bridge has to be turned.

- Release the clamp screws at the bridge using a 4 mm (5/32") Allen wrench.
- Slide the bridge to the lower end of the vest.
- Push the safety block into the chest dovetail and slip the bridge off the vest.
- Turn the bridge and slip it back on the dovetail.
- Find the desired position and re-tighten both screws.

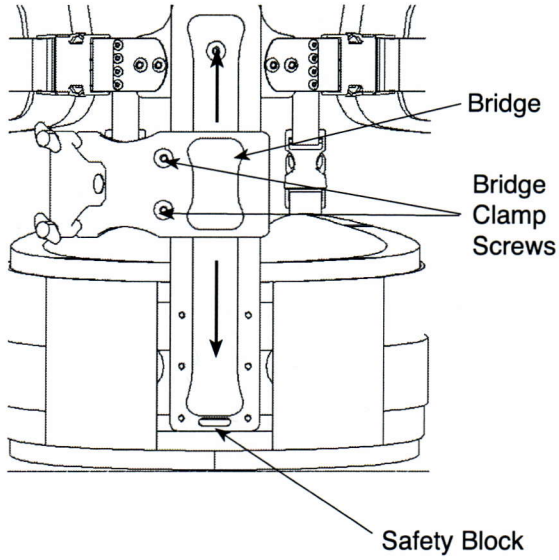

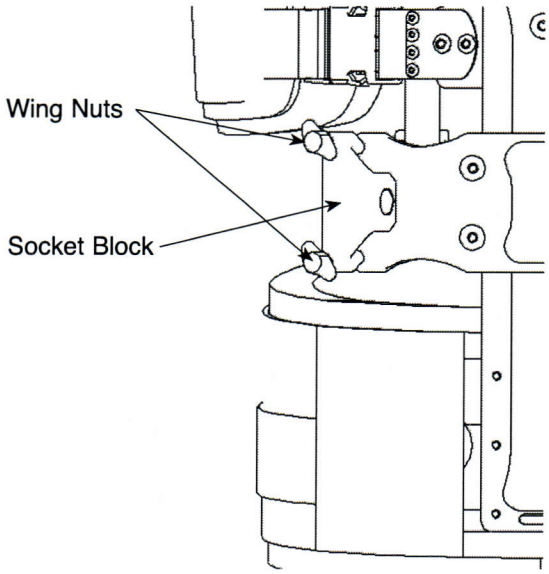

Socket Block Adjustments:

With the two wing nuts at the socket block the arm will be fixed at the vest.
The angle of the arm to the operator's body can also be adjusted with these two screws.

- Insert the arm into the socket block.
- Turn the upper screw till the arm post reaches a straight position in front of you.
- Now tighten the lower screw.

Note:
After loading the whole rig check whether both
screws are tightened!

Cleaning the Vest:

You can easily remove all soft pads from the vest.
Hand wash the pads only with warm water, mild detergent.

Note:
Do not use a mashine dryer!
Use a brush, warm water, and mild detergent to clean the other parts of the vest.

Note:
Keep the chest dovetail free of oil or grease!

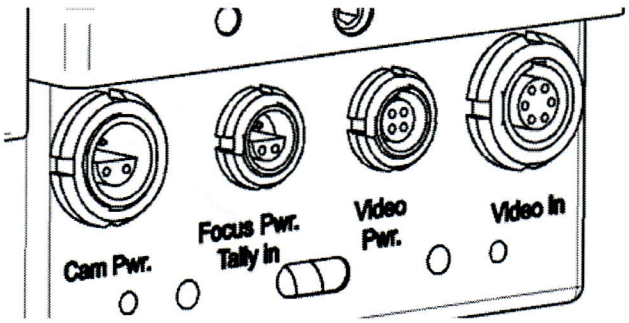

Version:1.1/01/04
Ausgabedatum / Issue date:01/04
Bestellnr./ Order no.:sbs18t230a

sachtler GmbH &Co.KG
Gutenbergstrasse 5
D-85716 Unterschleissheim
Germany
Telefon: (+49 89) 32 15 82 00
Telefax: (+49 89) 32 15 82 27
E-Mail: contact@sachtler.de
Homepage:http://www.sachtler.com

Postfach / P.O.BOX 1648
D-85706 Unterschleissheim
Germany

12V / 24V Cam Power Plug

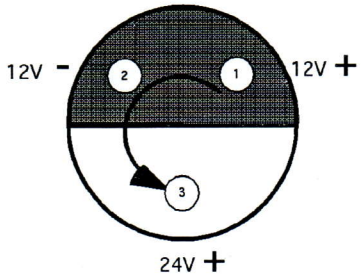

Aux Power Out / Tally Out Plug

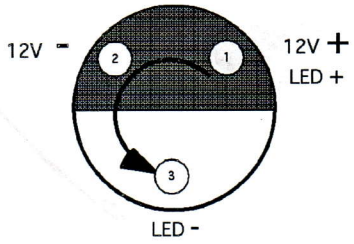

Focus Power / Tally In Plug

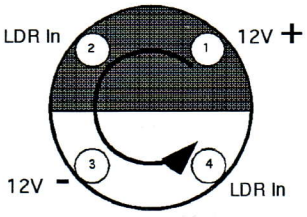

C-Battery Plug

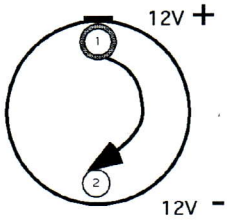

Video Power Plug

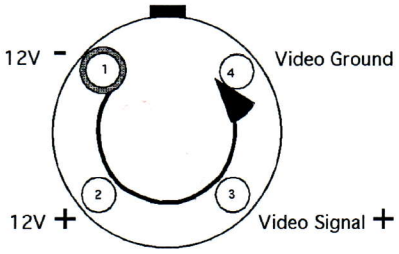

Recoder In/Out Plug

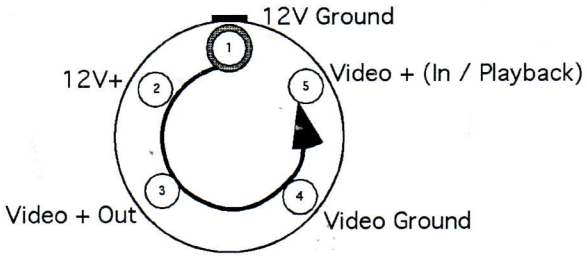

Analog Video In Plug

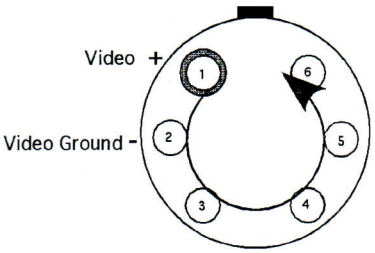

RGB HD Video In Plug

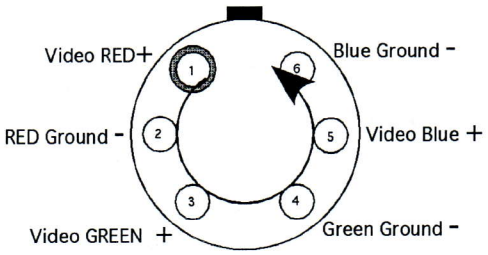

Analog Video Monitor Plug

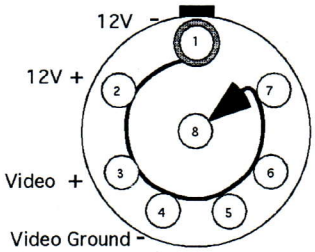

RGB HD Video Monitor Plug

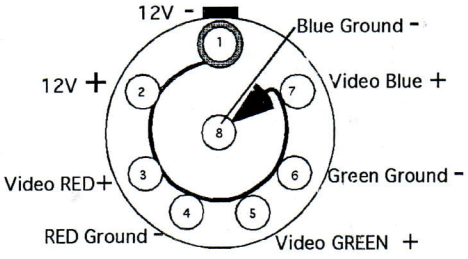

Artemis
Cine / Cine HD / EFP Pro / EFP
Safety Instructions

We want you to receive Sachtler products that are always state of the art.

Therefore we reserve the right to make changes based on technical advances.

Version:1.1/01/04
Ausgabedatum / Issue date:01/04
Bestellnr./ Order no.:sbs18t340a

sachtler GmbH &Co.KG
Gutenbergstrasse 5
D-85716 Unterschleissheim
Germany
Telefon: (+49 89) 32 15 82 00
Telefax: (+49 89) 32 15 82 27
E-Mail: contact@sachtler.de
Homepage:http://www.sachtler.com

Postfach / P.O.BOX 1648
D-85706 Unterschleissheim
Germany

set your ideas in motion!